CEN/TC 256

CEN/TC 256/WG 44 N 323

Date: 2015-06

FprEN 16584-2:2015

CEN/TC 256

Secretariat: DIN

Railway Applications — Design for PRM Use - General Requirements — Part 2: Information

Bahnanwendungen — Behindertengerechte Gestaltung — Teil 2: Allgemeine Anforderungen - Informationen

Élément introductif — Élément central — Partie 2 : Élément complémentaire

Contents

Page

Introduction 5
1 Scope 6
2 Normative references 7
3 Terms and definitions 8
4 Symbols and abbreviations 12
5 Requirements and assessment methodology 12
5.1 General 12
5.2 Infrastructure 13
5.2.1 Parking facilities for persons with disabilities and persons with reduced mobility 13
5.2.2 Obstacle-free routes 13
5.2.3 Doors and entrances 15
5.2.4 Ticketing, information desks and customer assistance points 15
5.2.5 Visual information: signposting, pictograms, printed or dynamic information 17
5.2.6 Spoken information 19
5.2.7 Platform danger area and edges of platforms 19
5.2.8 End of platforms 19
5.2.9 Platform – Wheelchair Boarding Aid Operational Zone 20
5.2.10 Level track crossings 20
5.2.11 Displays 20
5.3 Rolling stock 21
5.3.1 Seats 21
5.3.2 Wheelchair spaces 22
5.3.3 Doors 22
5.3.4 Toilets 25
5.3.5 Customer information 27
5.3.6 Internal and External Displays 32
5.3.7 Call for aid device 32
5.3.8 Wheelchair Accessible sleeping accommodation 34
6 Methodologies 34
6.1 Internal Display scrolling speed and character display duration 34
6.1.1 General 34
6.1.2 Methodology 35
Annex A (normative) PRM Signage 36
A.1 Infrastructure signs 36
A.2 Rolling stock signs 36
A.3 International wheelchair sign 37
A.4 Inductive loop (coupling) sign 37
A.5 Call for aid 37
A.6 Priority seating signs 38
Annex B (normative) Tactile Characteristics 39
B.1 Tactile Pictograms and Characters 39
B.2 Tactile Controls 40
B.3 Tactile Feedback or Tactile Indication 41
Annex C (normative) Eye point Dimensions 42
Annex D (normative) Visual acuity for Displays 43
Annex E (normative) Specific Braille Requirements 50

Annex F (normative) Characteristics of 'easily readable' 51
Annex G (normative) Passenger external doors audible signals 55
G.1 General 55
G.2 Door opening - Characteristics 55
G.3 Door close - Characteristics 55
Annex H (normative) EC verification 57
Annex I (normative) Summary of testing requirements 60
Annex J (informative) Good practice when using braille 62
Annex K (informative) Pictograms Examples and 'Good Practice' 66
Annex L (informative) Examples of Toilet Control Device Good Practice 71
L.2.1 Visual identification of the function should be pictograms or simple words. 71
L.2.2 Tactile identification of the function 71
L.3 "Vacant / occupied / out of service" indicator 74
L.3.1 General 74
L.3.2 Visual recognition: 74
L.3.3 Acoustic recognition 75
Annex M (informative) Electronic display assessment guidance 76
M.1 General 76
M.2 Worked through assessment example 77
Annex N (informative) Examples of San Serif Fonts 78
Annex O (informative) Examples of tactile toilet door locking devices 80
Annex P (informative) Door Buttons 82
P.1 Examples of door buttons 82
P.2 Visual and Tactile symbols on or near door buttons 82
Annex ZA (informative) Relationship between this European standard and the Essential Requirements of EU Directive 2008/57/EC 84
Bibliography 86

Foreword

This document (FprEN 16584-2:2015) has been prepared by Technical Committee CEN/TC 256 “Railway Applications”, the secretariat of which is held by DIN.

This document is currently submitted to the Formal Vote.

This document has been prepared under a mandate given to CEN by the European Commission and the European Free Trade Association, and supports essential requirements of EU Directive(s).

For relationship with EU Directive(s), see informative Annex ZA, B, C or D, which is an integral part of this document.

Introduction

This document is part of a suite of four ‘Design for PRM Use’ standards that have in total nine parts:

— EN 16584 is a standard that covers both Infrastructure and Rolling Stock — Railway Applications — Design for PRM Use - General Requirements:

  — Part 1: Contrast (EN 16584-1)

  — Part 2: Information (EN 16584-2)

  — Part 3: Optical and Friction Characteristics (EN 16584-3)

— EN 16585 is a standard that covers Rolling Stock - Railway Applications - Design for PRM Use - Equipment and Components On Board Rolling Stock:

  — Part 1: Toilets (EN 16585-1)

  — Part 2: Elements for Sitting, Standing and Moving (EN 16585-2)

  — Part 3: Clearways and Internal Doors (EN 16585-3)

— EN 16586 is a standard that covers Rolling Stock — Railway Applications — Design for PRM Use - Accessibility of Persons with Reduced Mobility to Rolling Stock:

  — Part 1: Steps for Access and Egress (EN 16586-1)

  — Part 2: Boarding Aids (EN 16586-2)

— EN 16587 is a standard that covers Infrastructure — Railway Applications — Design for PRM Use - Requirements for Obstacle Free Routes for Infrastructure.

These standards aim to clarify the requirements (with clear and consistent terms and definitions) and to define the associated criteria and, where appropriate, methodologies to allow a clear pass/fail assessment.

1 Scope

This European standard describes the specific ‘Design for PRM Use’ requirements applying to both infrastructure and rolling stock and the assessment of those requirements. The following applies to this standard:

- The definitions and requirements describe specific aspects of ‘Design for PRM Use’ required by people with reduced mobility as defined in the PRM TSI.
- This standard defines elements which are universally valid for obstacle free travelling including lighting, contrast, tactile feedback, transmission of visual and acoustic information. The definitions and requirements of this standard are to be used for infrastructure and rolling stock applications.
- This standard only refers to aspects of accessibility for PRM passengers it does not define non PRM related requirements and definitions.
- This standard assumes that the infrastructure or rolling stock is in its defined operating condition.
- Where minimum or maximum dimensions are quoted these are absolute NOT nominal requirements.

The ‘General Requirements’ standard is written in three parts:

- Part 1 contains
  - Contrast;
- This document is Part 2 and contains
  - Spoken information;
  - Written information;
  - Tactile information;
  - Pictograms;
- Part 3 contains
  - Lighting;
  - Low reflecting properties;
  - Transparent obstacles;
  - Slip resistance.

2 Normative references

The following documents, in whole or in part, are normatively referenced in this document and are indispensable for its application. For dated references, only the edition cited applies. For undated references, the latest edition of the referenced document (including any amendments) applies.

EN 81-70:2003+A1:2004, *Safety rules for the construction and installation of lifts. Particular applications for passenger and goods passenger lifts. Accessibility to lifts for persons including persons with disability Appendix E.4 – Lifts*.

EN 16584-1, *Railway Applications — Design for PRM Use — General Requirements — Part 1: Contrast*

EN 16584-3, *Railway Applications — Design for PRM Use — General Requirements — Part 3: Optical and Friction Characteristics*

EN 16585-1, *Railway Applications — Design for PRM Use — Equipment and Components On Board Rolling Stock — Part 1: Toilets*

EN 16585-2, *Railway Applications — Design for PRM Use — Equipment and Components On Board Rolling Stock — Part 2: Elements for Sitting, Standing and Moving*

EN 16585-3, *Railway Applications — Design for PRM Use — Equipment and Components On Board Rolling Stock — Part 3: Clearways and Internal Doors*

EN 16586-1, *Railway applications — Design for PRM Use — Accessibility of Persons with Reduced Mobility to Rolling Stock — Part 1: Steps for Access and Egress*

EN 16587*, Railway Applications — Design for PRM Use — Requirements for Obstacle Free Routes for Infrastructure*

EN 60268-16:2011, *Sound system equipment: Objective rating of speech intelligibility by speech transmission index*

ISO 3864-1:2011, *Graphical symbols — Safety colours and safety signs — Part 1 Design principles for safety signs and safety markings*

ISO 3864-4:2011, *Graphical symbols — Safety colours and safety signs — Part 4 Colorimetric and photometric properties of safety sign materials*

ISO/TR 7239:1984, *Development and principles for application of public information symbols*

ISO 7000, *Graphical symbols for use on equipment -- Registered symbols*

ISO 7001*, Graphical symbols - Public information symbols*

ISO 9186-1:2007, *Graphical symbols -- Test methods -- Part 1: Method for testing comprehensibility*

ISO 9186-2:2008, *Graphical symbols -- Test methods -- Part 2: Method for testing perceptual quality*

ISO 21542:2011, *Building construction — Accessibility and usability of the built environment*

3 Terms and definitions

For the purposes of this document, the following terms and definitions apply.

3.1
ascenders
that part of any of the characters b, d, f, h, i, j, k, l or t which protrudes above the x-height of the characters

Note 1 to entry: For examples see Annex F

3.2
bezel
raised area that surrounds a pressel as part of a pushbutton

3.3
character height
vertical size of uppercase letters or numbers

Note 1 to entry: For examples see Annex F

3.4
compressed 'ascender'
when the ascender has been compressed or squashed or misaligned and does not use a consistent x-height and/or ascender height

Note 1 to entry: For examples see Annex F

3.5
compressed 'descender'
when the descender has been compressed or squashed or misaligned and does not use a consistent x-height and/or descender height

Note 1 to entry: For examples see Annex F

3.6
contrast
perception of a difference visually between one surface or element of a building/rail vehicle and another by reference to their light reflectance values (LRV) or luminance values

Note 1 to entry: see BS 8300:2009+A1 2010 for further information

3.7
customer information
all visual and spoken information other than information intended only for staff

3.8
descenders
that part of any of the characters g, j, p, q or y which protrudes below the level of the baseline

Note 1 to entry: For examples see Annex F

3.9
essential information
subset of customer information delivered within the confines of the infrastructure comprising information concerning the departure of train services and safety instructions

Note 1 to entry: Platform number, train routeing information, departure times and any updates/changes to previously available information and actions required in reaction to a threat to personal safety (e.g. evacuate station FIRE!, stand back from platform edge train approaching)

3.10
first step
step that is the first step for a passenger to use, to overcome a height change

Note 1 to entry: For the external access/egress steps this will normally be the step that is closest to the platform edge (it may be a fixed or a moveable step), therefore this is the first step when boarding and the last step when alighting.

Note 2 to entry: In the context of steps for internal height changes (other than the external access/egress steps) this means the first usable step when ascending and the edge of the walking floor when descending

3.11
fixed longitudinal seats
passenger seats which are installed along the body side (not foldable or intended to tip up) facing perpendicular to the direction of travel

3.12
free standing devices
all elements or items within the confines of the station and on platforms, whether fixed or removable, that are not part of the station structures

Note 1 to entry: Elements that are not included in this definition are lifts, external staircases, walls, any suspended devices, (the lower most part of which is more than 2 100 mm above the walking floor) and items that have a dimension greater (perpendicular to the walking direction) than 2 000 mm (e.g. fence, waiting shelter)

3.13
halo
illuminated ring surrounding a pressel, not necessarily continuous

3.14
hue and chroma
attributes of a colour which include its hue (frequency) and saturation (the dominant wavelength of a colour) also known as "chromaticity"

Note 1 to entry: A colour system (colour space, colour model) defines colour by hue, saturation and brightness. The hue is the predominant colour, the saturation is the colour intensity from achromatic (colourless) to the pure colour and the value (result) is the brightness from light to dark

3.15
innovative solution
technological progression that results in a solution that does not comply with the specification set out in clause 5 of this standard or for which there are no assessment methods

Note 1 to entry: An innovative solution may only be used following a positive opinion from the European Commission

3.16
last step
final step for an ascending passenger to use to overcome a height change, forming the edge of the walking floor

3.17
Light Reflectance Value (LRV)
total quantity of visible light that is reflected by a surface at all wavelengths and directions when illuminated by a light source, the measured range of LRV is between 0 and 100 points

3.18
low reflecting properties
characteristics that reduce reflection of light from a surface

3.19
mixed case
text using a combination of upper and lower case characters

Note 1 to entry: For examples see Annex F

3.20
pictograms
graphical symbol, diagram or figure with a particular meaning which directly represents or conveys its meaning independently of language through a pictorial representation of a physical object, action or character

Note 1 to entry: Refer to ISO 7001:2007, ISO/TR 7239 and ISO 9186 for rules regarding Graphical symbols and frames

3.21
pressel
surface of the pushbutton which is pressed in order to activate the pushbutton

3.22
routeing information
this information is used by a passenger to guide them on their journey, a guide as to which route to take to get to a required destination or facility and changes along that journey

Note 1 to entry: This can be temporary information to an event e.g. exhibition or sporting event but NOT any form of commercial advertising

3.23
Sans Serif font
uses the characters from a Sans Serif typeface

Note 1 to entry: For examples see Annex F

3.24
Sans Serif
without serifs

Note 1 to entry: For examples see Annex F

3.25
Serif
additional stroke or line attached to the main strokes of a character or number

Note 1 to entry: For examples see Annex F

3.26
sharp edge
thin edge capable of cutting or an abrupt end or discontinuity of a surface which has the potential to injure a passenger in normal use

3.27
slip resistant
a surface finish that is sufficiently rough or otherwise specially formulated so that friction between the surface and a person's footwear or mobility aid is maintained at an acceptable level in both wet and dry conditions

Note 1 to entry: Snow and ice are outside this definition and this standard, therefore other special measures should be taken for steps and platforms etc that are exposed to these weather conditions

3.28
spoken information
all information audibly communicated in words

Note 1 to entry: This can be direct, pre-recorded or synthesised information.

3.29
station
any form of infrastructure where a train operates and passengers can board or alight in normal operation

3.30
station building
any buildings or structures within the confines of the station in areas for use by passengers which can be open at different times to the overall station

Note 1 to entry: This does not include other commercial structures that are not essential for travel

3.31
standard toilet
toilet not designed to be accessible to a passenger in a wheelchair

3.32
tactile
information that is understood through the physical sense of touch

Note 1 to entry: Tactile signs, controls, symbols, pictograms, guide path and Braille or raised characters are a physical means by which tactile information is provided

3.33
transparent obstacles
obstacles that allow objects or images to be seen as if there were no intervening material, seen through with a level of clarity

Note 1 to entry: Transparency in this standard is when an obstacle allows at least 50 % direct light transmission.

3.34
typefaces
characters (letters and numbers) of a particular design that are categorised as either ‘Serif’ or ‘Sans Serif’ where this is a collective definition of all the characters in that typeface and not the individual characters

Note 1 to entry: Examples of the characters in a ‘Serif and ‘Sans Serif’ typeface are shown in Annex F and example typefaces in Annex N

3.35
universal toilet
toilet designed to be used by all passengers including passengers in wheelchairs

3.36
visual acuity
clearness or acuteness of vision

3.37
visual information
all written information and pictograms

3.38
written information
all information visually communicated in words, letters and numerals, excluding pictograms

4 Symbols and abbreviations

Table 1 —Abbreviations

Abbreviation	Designation
EN	European standard
ISO	the International Organization for standardization
NCS	Natural Colour System
PRM	Persons with Reduced Mobility
RAL	RAL gemeinnützige GmbH.
STI-PA	Speech Transmission Index Passenger Address
TSI	Technical Specification for Interoperability

Table 2 —Symbols

Symbol	Designation	Unit
%ile	Percentile	
dB	Unit of noise level	decibel
dB LAeq	Average noise levels	decibel
Hz	Unit of frequency	Hertz
L	Unit of luminance in Candela per square metre	cd/m2
m	Unit of length	metre
mm	Unit of length	millimetre
s	Unit of time	second

5 Requirements and assessment methodology

5.1 General

Assessment of the requirements identified in clause 5 shall be according to Annex H and Annex I. Where additional assessment criteria apply, these will be identified against the relevant clause.

All dimensions in the figures are in millimetres (mm) unless otherwise stated.

5.2 Infrastructure

5.2.1 Parking facilities for persons with disabilities and persons with reduced mobility

Where a station specific parking area exists, there shall be sufficient and adapted parking spaces reserved for persons with disabilities and persons with reduced mobility eligible to utilise them at the nearest practicable position, within the parking area, to an accessible entrance.

- International or National Rules shall apply to parking spaces (this includes, but is not limited to: the number of spaces, access, location, dimensions, materials, colours, signing and lighting).

5.2.2 Obstacle-free routes

5.2.2.1 Vertical circulation

Staircases on the obstacle-free routes shall as a minimum have tactile warning surface indicators according to EN 16587 installed before the first descending step.

- International or National Rules shall apply to tactile warning surface indicators.

5.2.2.2 Route identification

Obstacle-free routes shall be clearly identified by visual information as detailed in clause 5.2.5.

Information on the obstacle-free route shall be provided to visually impaired people by tactile and contrasting walking surface indicators as a minimum.

- International or National Rules shall apply to tactile walking surface indicators
- If a tactile path is installed it shall comply with National Rules and shall be provided along the full length of the obstacle-free route(s)
- Contrast shall be assessed according to EN 16584-1.
- This requirement does not apply to obstacle free routes to and from car parks.

Technical solutions using remotely controlled audible devices or telephone applications are permitted to be used in addition or as an alternative.

- When used as an addition to the tactile walking surface indicators, international or National Rules, if available shall apply.
- When they are intended to be used as an alternative, they shall be treated as innovative solutions.

If there are handrails or walls within reach along the obstacle-free route to the platform, they shall have brief information (for example platform-number or direction-information) in Braille or in prismatic letters or numbers on the handrail, or on the wall at a height between 1 450 mm and 1 650 mm.

- Arrows are permissible, in addition to Braille or prismatic letters and numbers.

— For the purpose of this standard prismatic means raised or tactile character and shall be assessed according to Annex B.

— Braille shall be assessed according to Annex E.

— When placed on the handrail, this information shall be positioned on the rear of the handrail. The centreline of the tactile information shall be within the 180° arc as shown in Figure 1.

— When placed on the wall, this information shall be positioned as shown in Figure 2.

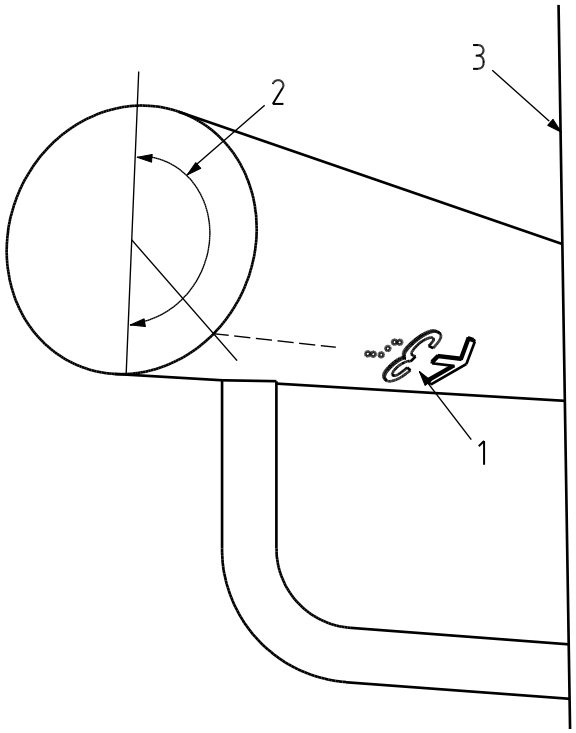

Key

1 Tactile information in Braille and prismatic characters on handrails at height 850 mm -1 000 mm
2 0-180° angle from top of handrail to centreline of tactile information
3 Wall, surface or structure on which handrail is mounted (rear side of the handrail)

NOTE The example in Figure 1 shows the tactile information at approximately 140° from the top

Figure 1 — positioning of tactile information on the handrail

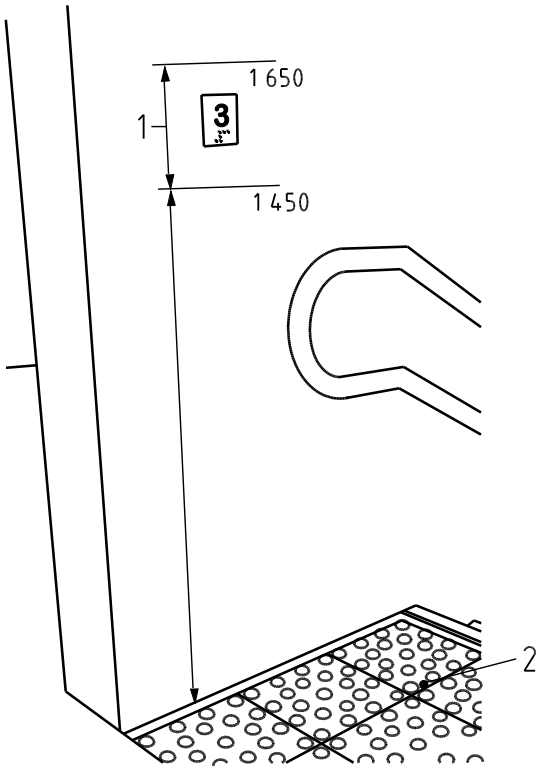

Key

1 Height range within which tactile information in Braille or prismatic characters shall be positioned as measured vertically from the walking floor
2 Walking floor
3 Sign or label containing tactile information

Figure 2 — vertical positioning of tactile information on the wall or surface

5.2.3 Doors and entrances

Door operating devices should be identifiable by touch (for example tactile markings, see Annex B) and should indicate the functionality.

— Where fitted assessment shall be according to appropriate international or national standards.

5.2.4 Ticketing, information desks and customer assistance points

1) Where manual ticket sales counters, information desks and customer assistance points are provided along the obstacle-free route:

   i) a minimum of one desk shall be accessible to a wheelchair user and to people of small stature

      — Assessment shall be according to ISO 21542 or appropriate national or regional standards

   ii) a minimum of one desk shall be fitted with an induction loop system for hearing assistance.

2) If there is a glass barrier between the passenger and sales person at the ticket counter:

i) this shall be removable

ii) if the glass barrier is not removable, an intercom system shall be fitted

NOTE 1 'Glass' in the context of this standard is to be understood as any transparent material (see EN 16584-3 for the requirements of glass barriers).

3) If electronic devices are fitted that display pricing information to the sales person, such devices shall also be fitted that display the price to the person purchasing the ticket.

— Assessment shall be according to Annex M

i) All information on the display shall be between 1 200 and 1 600 mm above the walking floor measured vertically from that floor.

ii) The information shall be viewed from the eye points of the agreed design range (for example 5%ile female to 95%ile male)

— Assessment shall be according to Annex C and relevant anthropometric data.

— Assessment for the wheelchair accessible ticket desk shall assume that the PRM is seated in a wheelchair for the assessment to be made with eye points as defined in Annex C.

— Assessment for the non-wheelchair accessible ticket desk shall assume that the PRM is standing for the assessment to be made with eye points as defined in Annex C.

iii) The height of uppercase letters and numbers on electronic displays shall be a minimum of 14 mm. The reading distance shall be a minimum of 500 mm from the display.

— Assessment of contrast and brightness shall be according to EN 16584-1

— For minimum reading distances greater than 500 mm then a proportionately larger character height shall be used. (See Annex D for a permitted method of determining the height).

4) Where ticket vending machines are provided on an obstacle free route at a station a minimum of one of these machines:

i) shall have a tactile contact area (to include the keyboard, the payment and ticket vending areas) at a height according to ISO 21452 or appropriate national or regional standards.

ii) shall have a display and keyboard which shall be visible by someone sitting in a wheelchair

— Assessment of contrast for characters on the keyboard shall be according to EN 16584-1 and lighting conditions shall be according to EN 16584-3

iii) The information shall be viewed from the eye points of the agreed design range (for example 5%ile female to 95%ile male)

— Assessment shall be according to Annex I and relevant anthropometric data

— Assessment for the wheelchair accessible ticket vending machine shall assume that the PRM is seated in a wheelchair for the assessment to be made with eye points as defined in Annex C

iv) The height of uppercase letters and numbers on ticket vending machine displays shall be a minimum of 7 mm. The reading distance shall be a minimum of 500 mm from the display

— Assessment of contrast and brightness shall be according to EN 16584-1.

— For minimum reading distances greater than 500 mm then a proportionately larger character height shall be used. (See Annex D for a permitted method of determining the height).

v) If the display is the method of entering information then it shall comply with the requirements of clause 5.2.4 (4) (i).

NOTE 2 Tactile feedback from the ticket machine or verbal communication of the process to a partially sighted person is recommended.

5.2.5 Visual information: signposting, pictograms, printed or dynamic information

1) The following information shall be provided:

— Safety information and Safety instructions

— Warning, prohibition and mandatory actions signs

— Information concerning the departure of trains

— Identification of station facilities, where provided, and access routes to those facilities

2) The fonts, symbols and pictograms used for visual information shall contrast with their background.

— Contrast shall be assessed according to EN 16584-1

3) Signage (signposting) containing appropriate information shall be provided:

i) at all points where passengers need to make a route taking decision

— A route taking decision is when a choice between continuing along an existing route or choosing another is made see Annex K for examples

— The appropriate level of information required to make the decision shall be provided. For example, “To the platforms” may be appropriate at the first decision making point when entering the station, rather than specific signs for individual platforms

— All information to be used in a station shall be collated and shall be assessed at the design review phase (see Annex I) to show the appropriate nature of information used

ii) at intervals on the route

— Intervals shall be no greater than 100 m apart

— A plan/map of station shall be assessed at the design review phase (see Annex I) showing locations of station routing information and then demonstrated when built.

iii) Signage, symbols and pictograms shall be applied consistently over the whole route

— All signage, symbols and pictograms to be used in a station shall be collated and shall be assessed at the design review phase (see Annex I) to show the consistency of signage, symbols and pictograms used.

4) The information concerning the departure of trains (including destination, intermediate stops, platform number and time) shall be provided at a maximum height of 1 600 mm in at least one location in the station. This requirement applies to printed and dynamic information, whichever is provided.

— All information on signage or on a display shall be at a height no greater than 1 600 mm. The lowest height for that information shall be according to appropriate international or national standards for PRM.

5) The typeface used for visual information shall be easily readable

— Assessment shall be according to Annex F

— All safety, warning, mandatory action and prohibition signs shall include pictograms and shall be designed according to ISO 3864-1

6) Tactile information signage shall be fitted in:

— Toilets, for functional information and call for aid if appropriate.

— Assessment shall be according to Annex B and see Annex K for examples. If Braille is used it shall be according to Annex E and see Annex J for good practice information.

— Lifts according to EN 81-70:2003+A1:2004 Annex E.4

7) Time information presented in digits shall be in the 24 hour system.

8) The following specific graphic symbols and pictograms shall be fitted with the wheelchair symbol according to Annex A:

— Directional information for wheelchair specific routes

— Indication of the wheelchair accessible toilets and other amenities if provided

— Assessment shall be according to Annex A and see Annex K for examples

— If there is train configuration information on the platform, indication of the wheelchair boarding location.

The symbols are permitted to be combined with other symbols (see Annex K for examples).

9) Where inductive loops are fitted these shall be indicated by a sign as described in Annex A.

10) In wheelchair accessible toilets, where hinged handrails are provided, a graphic symbol showing the rail in both the stowed and deployed position shall be provided. (See Annex K for examples).

— Assessment shall ensure compliance with the characteristics in Annex A.

11) There shall be no more than five pictograms, together with a directional arrow, indicating a single direction placed adjacent to each other at a single location. (See Annex K for examples).

12) Displays shall be compliant with the requirements of 5.4. In this point, the term “display” shall be understood as any support of dynamic information.

5.2.6 Spoken information

The spoken information, where provided, shall have a minimum STI-PA level of 0,45

— Assessment shall be according to EN 60268-16

NOTE 1 Where provided, spoken information should be consistent with essential visual information that is being displayed.

NOTE 2 Where spoken information is not provided automatically, an audible communication system should be provided to allow users to acquire the same information (for example a staffed or automated telephone information service).

5.2.7 Platform danger area and edges of platforms

1) The boundary of the danger area, furthest from the rail side edge of the platform shall be marked with a visual warning line that shall be:

   i) colour contrasting

      — Assessment shall be according to EN 16584-1

   ii) slip resistant

      — Assessment shall be according to EN 16584-3

   iii) a minimum width of 100 mm.

2) The boundary of the danger area, furthest from the rail side edge of the platform shall be marked with tactile walking surface indicators which can be one of two types:

   i) an attention pattern indicating a hazard at the boundary of the danger area

   ii) a guiding pattern indicating a path of travel at the safe side of the platform

      — Assessment for tactile warning surface indicators shall be according to ISO 21542 or national rules.

3) The positioning of the visual and tactile warnings shall be according to international or national rules.

5.2.8 End of platforms

Where the end of the platform is not fitted with a barrier that prevents public access it shall be marked with:

1) a visual warning line that shall be:

   i) colour contrasting

      — Assessment shall be according to EN 16584-1

ii) slip resistant

— Assessment shall be according to EN 16584-3

iii) a minimum width of 100 mm

2) tactile walking surface indicators with an attention pattern indicating a hazard.

— Assessment for tactile warning surface indicators shall be according to ISO 21542 or national rules

5.2.9 Platform – Wheelchair Boarding Aid Operational Zone

If the wheelchair boarding position is predefined, the platform position(s) of the wheelchair accessible doorway(s) may be marked with the international symbol for the 'provision for disabled persons'.

— Where used, the signs shall be assessed according to Annex A.

NOTE The position on the platform where the facility is likely to be used should take into account the train composition variations.

5.2.10 Level track crossings

If level track crossings are used as part of obstacle free routes, or are the unique solution for all passengers, the beginning and the end of the crossing surface shall have:

1) a visual warning line that shall be:

i) colour contrasting

— Assessment shall be according to EN 16584-1

ii) slip resistant

— Assessment shall be according to EN 16584-3

iii) a minimum width of 100 mm

2) tactile walking surface indicators.

— Assessment for tactile warning surface indicators shall be according to ISO 21542 or national rules

5.2.11 Displays

1) Displays shall be sized to show individual station names or words of messages. Each station name, or words of messages, shall be displayed for a minimum of 2 s.

— Assessment shall be according to clause 6

NOTE If multiple words are displayed simultaneously, additional reading time is to be provided

2) If a scrolling display is used (either horizontal or vertical)

i) each complete word shall be displayed for a minimum of 2 s and

— Assessment shall be according to clause 6.1

— The complete word shall be displayed for a minimum of 2 s

ii) the horizontal scrolling speed shall not exceed an average of 6 characters per s.

— Assessment shall be according to clause 6.1

3) Minimum character height on displays shall be designed and assessed for an area of use defined by the maximum viewing distance according to the following formula:

— Reading distance in mm divided by 250 = character height (for example: 10 000 mm / 250 = 40 mm).

5.3 Rolling stock

5.3.1 Seats

5.3.1.1 Priority Seats

1) The priority seats shall be identified by a sign

— Assessment shall be according to Annex A. See EN 16585-2 for other applicable information (for example location)

2) It shall be stated that other passengers shall make such seats available to those who are eligible to use them when required; this can be combined with the priority seat sign above or provided as a supplementary sign.

NOTE Example of a combined sign is shown in Figure 3

Figure 3 — A Priority Seat sign with example wording for interior use

KEY

1 Priority Seat sign

2 Example of required text on the sign

3) The vehicles containing priority seats shall be identified by a sign

— Assessment shall be according to Annex A – see EN 16585-2 for other applicable information (for example location).

5.3.2 Wheelchair spaces

1) The wheelchair space shall be fitted with a call for aid device that shall

i) be according to clause 5.3.7

— Assessment for the location shall be according to EN 16585-2

ii) enable a wheelchair user to inform a person who can take appropriate action in the event of danger

2) A sign conforming to Annex A shall be placed immediately next to, or in the wheelchair space so as to identify the space as the wheelchair space.

— Assessment shall be according to Annex A.

NOTE See EN 16585-2, 5.2 NOTE 6 for other applicable information

5.3.3 Doors

5.3.3.1 Interface of the door control device

1) A door control device shall have visual indication, on or around it when enabled.

— Assessment for visual indication means the continuous illumination or flashing of a light emitter at a frequency of between 1 Hz and 2 Hz

— This requirement does not apply to door handles

2) It shall be identifiable by touch (for example: tactile markings); this identification shall indicate the functionality, (see Annex P for relevant information and examples).

— Assessment shall ensure compliance with the characteristics in Annex B.

5.3.3.2 Exterior Doors

1) The designated wheelchair exterior accessible doorways shall be the closest doorways to the designated wheelchair spaces, those entrances shall be clearly labelled with a sign.

— Assessment shall ensure compliance with the characteristics in Annex A

— See EN 16585-2 for other applicable information (for example location)

2) When a door is released for opening a signal shall be given:

i) that is clearly audible to persons inside the train

— Assessment shall be according to Annex G

ii) that is clearly audible to persons outside the train

— Assessment shall be according to Annex G

iii) that is clearly visible to persons inside and outside the train

— Assessment for visual indication means the continuous illumination of a light emitter for the period that the door is released for opening

iv) The audible signal shall last for a minimum of 5 s unless the door is operated, in which case it may cease after 3 s.

— When assessing this requirement refer to Annex G.

3) When a door is automatically or remotely opened by the driver or other member of the train crew a signal shall be given:

i) that is clearly audible to persons inside the train

— Assessment shall be according to Annex G

ii) that is clearly audible to persons outside the train

— Assessment shall be according to Annex G

iii) that is clearly visible to persons inside and outside the train

— Assessment for visual indication means the continuous illumination of a light emitter

iv) This signal shall last for a minimum of 3 s from the moment that the door starts to open

— When assessing this requirement refer to Annex G

4) When a door that is automatically or remotely closed, is about to operate, an alert signal shall be given

i) that is clearly audible to persons inside the train

— Assessment shall be according to Annex G

ii) that is clearly audible to persons outside the train

— Assessment shall be according to Annex G

iii) that is clearly visible to persons inside and outside the train

— Assessment for visual indication means the flashing of a light emitter at a frequency of between 1 Hz and 2 Hz

iv) This alert signal shall last for a minimum of 2 s before the door starts to close and shall continue while the door is closing

— When assessing this requirement refer to Annex G

5) When a door is closed by a passenger, an alert signal shall be given:

i) that is clearly audible to persons inside the train

— Assessment shall be according to Annex G

ii) that is clearly audible to persons outside the train

— Assessment shall be according to Annex G

iii) that is clearly visible to persons inside and outside the train

— Assessment for visible alert signal means the flashing of a light emitter at a frequency of between 1 Hz and 2 Hz

iv) This alert signal shall commence following operation of the door control. The alert signal shall continue while the door is closing

— When assessing this requirement:

— the audible and visible alert signals shall continue until the doors are closed

— if the doors remain released for opening apply 5.3.3.2 (2) (iii)

6) The sound source for door audible signals shall be located

i) in the area local to the control device

— For assessment 'local' means the door sounder shall be located within 100 mm of the centre of the applicable door control device.

ii) if there is no such control device, adjacent to the doorway.

— Assessment for 'adjacent' shall be according to the hatched area in Figure 4

iii) If there is more than one door control device fitted internally (for example on each door pillar) to a doorway, only one will require a sounder.

iv) If there is more than one door control device fitted externally (for example on each door leaf) to a doorway, only one will require a sounder.

7) The visible signal shall be located so that:

i) for door released for opening signal it shall be local to the door control (for example push button illuminated halo)

ii) for door close alert signal it shall be clearly visible to persons inside the train such that it minimises the opportunity for it to be obscured by passengers located in the vestibule

— Assessment of correct location of interior alert signal shall be within the hatched area identified in Figure 4

iii) clearly visible to persons outside the train

— The external visible signals shall be provided by the push button illuminated halo, where fitted

— Where external door control push button illuminated halos are not fitted then an alternative light emitter shall be fitted

8) External signals may be:

i) omitted if the whole line is equipped with platform screen doors and the signals are provided by platform based equipment

ii) suppressed at platforms equipped with platform screen doors and the signals are provided by platform based equipment

9) The method of door activation shall be by train crew, semi-automatic (i.e. passenger pushbutton operation) or automatic.

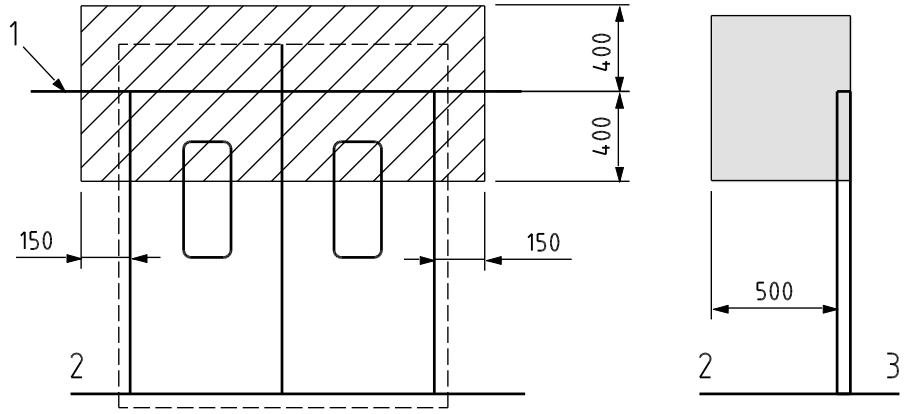

Key

1 door header panel

2 vehicle interior

3 vehicle exterior

Figure 4 — Indicated area (hatched) is that deemed to be adjacent to the door

5.3.4 Toilets

5.3.4.1 Standard and universal toilets: common parameters

1) A visual and tactile (or audible) indication shall be given inside and outside the toilet to indicate when a door has been locked. For examples see Annex O and for other relevant information see Annex L.3

— Visual indication means either:

i) The continuous illumination for the full period that the door is locked of a light emitter that shall have a minimum luminance of 30 cd/m2 and a maximum of 100 cd/m² or

ii) The control device shall move into a perceptibly different position as a consequence of its activation. This also provides the tactile indication.

— Assessment of tactile indication shall ensure compliance with the characteristics in B.3.

— Audible indication inside the toilet shall be via one or more tones (this should be three consecutive tones of nominally 0,6 s duration, with intervals of 0,6 s at frequency of 1 000 Hz ± 200 Hz). It only needs to sound once, immediately after activation and prolonged tones of more than 3 s should be avoided.

2) Any control device, including flushing system shall be identifiable by touch.

    — Assessment of identifiable by touch shall ensure compliance with the characteristics in Annex B

3) Clear, precise information for the operation of any control device shall be provided, making use of pictograms and shall be tactile.

    — In this clause 'information for the operation of any control device' means the indication of its function, not the details for the operation of the control device itself, (for example the information associated with the flush control device shall state 'flush' in either tactile characters or by a pictogram. It does not require a sign to state 'push button to flush'.

    — This requirement applies to door controls, flush controls, soap/water/dryer controls and the litter bin (if provided)

        — Assessment shall ensure compliance with the characteristics in Annex B (see Annex K and Annex L for examples and other relevant information

4) Tactile information signage shall be fitted for functional information inside toilet cubicles, if appropriate

    — In this clause 'functional information' means details about the actions required to operate the control device

    — This requirement applies to powered door controls and call for aid devices, where fitted

        — Assessment shall ensure compliance with the characteristics in Annex B

5.3.4.2 Universal toilet

1) The exterior of the door shall be marked with a sign.

    — Assessment shall ensure compliance with the characteristics in Annex A

2) A pictogram showing the hinged handrail in both the stowed and deployed positions shall be provided. See Annex K for an example.

    — Assessment shall ensure compliance with the characteristics in Annex A

3) The toilet cubicle shall be fitted with not less than two call for aid devices that shall

    i) be according to clause 5.3.7

        — Assessment for the location shall be according to EN 16585-1

    ii) when operated, send a signal to a person who can take appropriate action; they need not initiate a communication.

4) The control element (for example pushbutton) of the call for aid devices shall

    i) be distinct from any other control within the toilet

    ii) be coloured differently from other control devices.

5.3.5 Customer information

5.3.5.1 General

1) The requirements in 5.3.5.1 (2) below shall apply to the following information:

   - Safety information and safety instructions
   - Audible safety instructions coupled with visible indications in case of emergency
   - Warning, prohibition and mandatory actions signs
   - Information concerning the route of the train, including information about delays and unplanned stops,
   - Information concerning the location of on-board facilities

2) Written information in signage or dynamic visual information applications, shall be easily readable.

   — Assessment as being 'easily readable' shall be by meeting the following characteristics:

   i) Use of a Sans Serif typeface. See Annex N for examples of compliant typefaces

   ii) Use of mixed case shall be used for all written information. (not in uppercase letters only). See Annex F

   iii) Use of clearly recognisable descenders and ascenders

   — Descenders in Roman script shall be clearly recognisable and have a minimum size ratio of 20 % to the uppercase characters height (see Annex F). (Examples of typefaces that deliver the requirement are included in Annex N).

   — Compressed descenders and ascenders shall not be used.

3) Time information presented in digits shall be in the 24 hour system.

5.3.5.2 Signage, pictograms and tactile information

1) All safety, warning, mandatory action and prohibition signs shall include pictograms and shall be designed according to ISO 3864-1.

2) There shall be no more than five pictograms, together with a directional arrow, indicating a single direction placed adjacent to each other at a single location. (See Annex K for examples).

3) The following specific pictograms shall be fitted with the wheelchair symbol according to Annex A:

   i) Directional information for wheelchair accessible amenities

   — Assessment shall be according to Annex A for sign and Annex K for combining pictograms

   ii) Indication of the wheelchair accessible door location outside the train

   iii) Indication of the wheelchair space inside the train

iv) Indication of the universal toilets

The symbols can be combined with other symbols (for example: carriage number, toilet, etc).

4) Where inductive loops are fitted these shall be indicated by a pictogram.

— Assessment shall be according to Annex A

5) In universal toilets, where hinged handrails are provided, a pictogram showing the rail in both the stowed and deployed positions shall be provided.

— Assessment shall comply with 5.3.4.2.

6) If a vehicle provides reserved seats the number or letter of that vehicle as used in the reservation system:

i) shall be displayed externally on or adjacent to all its passenger access doors.

ii) shall be displayed in characters not less than 70 mm high

iii) shall be visible both when the door is open and closed.

7) If seats are identified by numbers or letters, the number or letter of the seat:

i) shall be displayed on or adjacent to every seat

ii) shall be in characters not less than 12 mm high

iii) shall contrast with their background.

— Assessment shall be according to EN 16584-1.

8) Tactile information signage shall be fitted :

i) In toilets and wheelchair accessible sleeping accommodation, for functional information and call for aid device if appropriate

— Assessment shall be according to Annex B and see Annex K for examples. If Braille is used it shall be according to Annex E and Annex J

ii) for the open/close button of passenger accessible doors (doors for use by passengers) and call for aid devices

— Assessment shall be according to Annex B and see Annex K for examples. If Braille is used it shall be according to Annex E and Annex J.

5.3.5.3 Dynamic visual information

1) The final destination or route shall be displayed on the outside of the train on the platform side adjacent to at least one of the passenger access doors on a minimum of alternate vehicles of the train.

— when assessing ‘route’ in this context the following shall be considered: if there are multiple routes or different stopping patterns to destination then this shall be made clear on this display.

2) Where trains operate in a system, in which dynamic visual information is given on the station platform every 50 m or less, and destination or route information is also provided on the front of the train, it is not mandatory to provide information on the sides of vehicles.

   — When assessing this requirement 'every 50 m' shall be assessed as 50 m from any point along that platform and discrete to that train so confusion with other platforms or trains could not occur.

   — External dynamic visual information on the sides of vehicles may be omitted if the whole line is equipped with platform screen doors and the destination or route information is provided by platform based equipment.

   — External dynamic visual information on the sides of vehicles may be supressed at platforms equipped with platform screen doors and where the destination or route information is provided by platform based equipment.

3) The final destination or route of the train shall be displayed inside each vehicle.

   — when assessing ‘route’ in this context the following shall be considered: if there are multiple routes or different stopping patterns to destination then this shall be made clear on this display.

   — As a minimum the final destination shall be displayed whenever the train is stopped in a station and following departure from a station for a further 2 minutes.

4) The next stop of the train shall be displayed inside each vehicle such that it can be read from:

   i) all wheelchair spaces.

      — When assessing this requirement ‘read’ means that the line of sight to the display is in line with the direction that the wheelchair user is facing when seated in their wheelchair, with their back towards the wheelchair space support structure, according to EN 16585-2

   ii) a minimum of 51% of passenger seats and a minimum of 51% of the priority seats,

      — When assessing this requirement ‘read’ means that the line of sight to the display is in line with the direction that the seated passenger is facing.

      — Assessment shall be of whole numbers rounded up (e.g. 51% of 60 seats is 31 not 30)

   iii) The requirement to make the destination and ‘next stop’ information visible from 51% of passenger seats does not apply to a compartment in a vehicle where those compartments have a maximum of 8 seats and are served by an adjacent corridor. This information shall be visible to a person standing in a corridor outside a compartment.

NOTE 1 “can be read” means a display which is not positioned at such an acute angle from the line of vision of the passenger as to be unreadable. Viewing angle and contrast of the display should be considered when specifying.

NOTE 2 Ideally all passengers sat in priority seats should be able to read the display.

NOTE 3 The requirement is only disallowed in sections of the vehicle that includes the compartments, and remains a requirement for the rest of the vehicle.

5) Information about the next stop shall be displayed at least two minutes before arrival at the station concerned. If the next station is less than two minutes planned journey time away, the next station shall be displayed immediately following departure from the previous station.

— When assessing this requirement, information relating to the next stop is to be displayed until the train has stopped at that destination and the doors have been enabled for opening. The information about the next stop may be shown on the same display as the final destination. However, it shall revert to show the final destination as soon as the doors have been enabled for opening.

— When assessing this requirement for a solution that meets all other applicable requirements while displaying both the next stop and final destination at the same time, then the requirement to revert does not apply.

NOTE 4 Consideration should be given for the need for multiple language capability. When deciding on the choice and number of languages to be provided, the Contracting Entity should have regard to the clientele of an individual train service.

NOTE 5 Consistency requirements between audible and visual ‘essential information’ applies when using more than one language.

6) If the system is automated, it shall be possible to suppress or correct incorrect or misleading information.

7) Internal and external displays shall comply with the requirements of clause 5.3.6. In this point, the term “display” shall be understood as any support of dynamic information.

8) Advertisements shall not be combined with routeing information.

— Advertisements and routing information can be physically

— separated (not on the same display), or

— displayed on the same display but not at the same moment

NOTE 6 General information about public transport services is not to be considered as advertisements for the purposes of this Clause. Branding name or logo of the display or system supplier is not considered as advertising

5.3.5.4 Dynamic audible information

1) The train shall be fitted with a public address system which shall be used either for routine or emergency announcements by the driver or by another crew member who has specific responsibility for passengers.

2) The public address system shall

i) operate on a manual, an automated or pre-programmed basis.

ii) if automated, have a method to suppress, or correct, incorrect or misleading information.

3) The public address system shall be capable of announcing the destination and next stop of the train at each stop, or on departure from each stop.

NOTE 1 Consideration should be given for the need for multiple language capability. When deciding on the choice and number of languages to be provided, the Contracting Entity should have regard to the clientele of an individual train service.

NOTE 2 Consistency requirements between audible and visual ‘essential information’ applies when using more than one language

NOTE 3 The public address system can only be assessed for its capability to fulfil this requirement as the execution of it is an operational requirement

4) The public address system shall be capable of announcing the next stop of the train at least two minutes before the arrival of the train at that stop. If the next station is less than two minutes planned journey time away, the next station shall be announced immediately following departure from the previous station.

NOTE 4 The public address system can only be assessed for its capability to fulfil this requirement as the execution of it is an operational requirement

5) The spoken information shall have a minimum STIPA level of 0.45, according to EN 60268-16. The public address system shall meet the requirement at all seat locations and wheelchair spaces and at both standstill and 80 km/h open track (see Figure 5).

— The assessment of the system is by meeting the requirement at each seat location and wheelchair space and shall be met by measuring at the following set positions:

— It shall also be measured on the centre point of each wheelchair position

— Uniformity is required between all the measured locations with a maximum 10 % variation.

NOTE 5 There should be a measurement in the toilets when fitted.

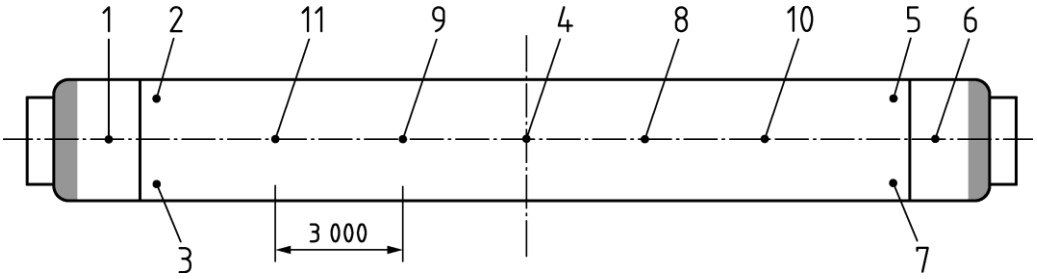

Key
1 centre of each vestibule/entrance area, (positions 1 & 6)
2 4 corner positions for each saloon (centred above the seats at a height of 1 200 mm (positions 2, 3, 5 & 7)
3 4 corner positions for each saloon (centred above the seats at a height of 1 200 mm (positions 2, 3, 5 & 7)
4 centre of the passenger saloon and then positions along the centre line (intervals of 3 000mm), (position 4, then 8, 9, 10, 11 as required based on saloon length)
5 4 corner positions for each saloon (centred above the seats at a height of 1 200 mm (positions 2, 3, 5 & 7)
6 centre of each vestibule/entrance area, (positions 1 & 6)
7 4 corner positions for each saloon (centred above the seats at a height of 1 200 mm (positions 2, 3, 5 & 7)
8 centre of the passenger saloon and then positions along the centre line (intervals of 3 000 mm), (position 4, then 8,9,10,11 as required based on saloon length)
9 centre of the passenger saloon and then positions along the centre line (intervals of 3 000 mm), (position 4, then 8,9,10,11 as required based on saloon length)
10 centre of the passenger saloon and then positions along the centre line (intervals of 3 000 mm), (position 4, then 8,9,10,11 as required based on saloon length)
11 centre of the passenger saloon and then positions along the centre line (intervals of 3 000 mm), (position 4, then 8,9,10,11 as required based on saloon length)

Figure 5 — Example showing measuring points for an indicative vehicle layout

5.3.6 Internal and External Displays

1) Each station name (which may be abbreviated), or words of messages, shall be displayed for a minimum of 2 s.

— Assessment shall be according to clause 6

NOTE 1 If multiple words are displayed simultaneously, additional reading time should be provided.

2) If a scrolling display is used (either horizontal or vertical),

i) each complete word shall be displayed for a minimum of 2 s and

— Assessment shall be according to clause 6

— The complete word shall be displayed for a minimum of 2 s

ii) the horizontal scrolling speed shall not exceed an average of 6 characters per s.

— Assessment shall be according to clause 6

3) The typeface used for texts shall be easily readable.

— Assessment shall be according to Annex N

4) Uppercase Letters and numbers used in external displays shall have a minimum height of 70 mm on front displays and 35 mm on side displays.

— The height of the character is as measured on the display

5) Internal displays shall be designed and assessed for use in an area defined by the maximum viewing distance according to Table 3:

Table 3: Minimum character heights, relative to reading distance, for internal displays in rolling stock

Reading distance	Height of uppercase letters and numbers
<8 750 mm	(reading distance / 250) mm
8 750 to 10 000 mm	35 mm
>10 000 mm	(reading distance / 285) mm

NOTE 2 For displays that are viewed at a distance of 5 000 mm up to 10 000 mm a character height of 35 mm is recommended

NOTE 3 For viewing distances less than 5 000 mm then the character height chart in Annex D indicates the acceptable character height (7 mm should always be the smallest electronically displayed character height used)

5.3.7 Call for aid device

If a call for aid device includes a 2 way communication function it shall still be defined as a ‘call for aid device’ for the purposes of this standard.

The control of the call for aid devices shall

- be distinct from any other control devices within the wheelchair space/universal toilet/wheelchair accessible accommodation in which it is fitted.

- be coloured differently from any other control devices within the wheelchair space/universal toilet/wheelchair accessible accommodation in which it is fitted.

- contrast with their background

1) The call for aid device shall:

    — have a bezel or pressel that shall be coloured yellow according to EN 16683

        — the bezel or pressel shall not be green or red

        — the bezel shall contrast with the surface on which it is located

        — Contrast shall be assessed according to EN 16584-1

    — the shape of the bezel shall be triangular as is specified in EN 16683

    — the function of the device shall be indicated by a bell symbol which

        — if placed on the pressel the symbol shall contrast by a minimum 60 points LRV difference with the pressel. (For example white symbol on dark blue or black symbol on white/silver/light grey).

        — if indicated by a separate sign it shall be represented by a white bell symbol on a dark blue background according to Annex A

        — provide additional operating information if necessary according to Annex A

        — if placed on the bezel the symbol shall contrast by a minimum 60 points LRV difference with the bezel. (For example black symbol on a yellow bezel);

            — Contrast shall be assessed according to EN 16584-1;

2) The call for aid device shall:

    i) include a tactile bell symbol

        — Assessment shall ensure compliance with the characteristics in Annex B

        — The bell symbol shall be according to ISO 7000 symbol 2301 (urgent alert indicator)

    ii) emit a visual and audible indication to the user that it has been operated

        — Visual indication means the continuous illumination or flashing of a light emitter at a frequency of between 1 Hz and 2 Hz (shall have a minimum luminance of 30 cd/m^2 and a maximum of 100 cd/m^2).

        — Movement of the alarm device control to a perceptibly different position as a consequence of its activation is not sufficient.

— Audible indication may be via one or more tones or through the spoken word. It only needs to sound once, immediately after activation.

NOTE Prolonged tones of more than 3 s should be avoided.

5.3.8 Wheelchair Accessible sleeping accommodation

1) If a rail vehicle provides wheelchair accessible sleeping accommodation, the exterior of the relevant vehicle door and the wheelchair accessible sleeping accommodation door shall be marked with a sign.

— Assessment shall ensure compliance with the characteristics in Annex A.

— See EN 16585-2 for other applicable information (for example location of sign on exterior of vehicle).

2) The sleeping accommodation shall be fitted with not less than two call for aid devices that shall when operated, send a signal to a person who can take appropriate action; they need not initiate a communication.

— Assessment for the location shall be according to EN 16585-2.

i) The interface of the call for aid devices shall be as defined in clause 5.3.7.

ii) The call for aid devices (for example pushbutton or bezel) shall:

— be distinct from any other control device within the sleeping accommodation

— be coloured differently from those control devices

— contrast with their background according to EN 16584-1.

6 Methodologies

6.1 Internal Display scrolling speed and character display duration

6.1.1 General

The requirements to be measured are:

— If a scrolling display is used (either horizontal or vertical), each complete word shall be displayed for a minimum of 2 s and the horizontal scrolling speed shall not exceed 6 characters per s.

— The requirements regarding horizontal text scrolling are based on worst case words (see Annex M) so therefore the longest single word used on the route /network or the shortest 6 character string width used.

— A scrolling rate based on six of the smallest width characters (e.g. ‘i’ or ‘,’) has the disadvantage of being extremely slow to read. This would equate to only one character 'W ' per s.

— To prove the compliance of the horizontal scrolling speed, an average character width based on all the instances of the letters of a representative ‘pool of words’ is required. This includes all instances of both upper and lower case characters.

— The ‘pool of words’ shall be as defined by the railway undertakings.

6.1.2 Methodology

— Work out the average character width based on all instances of the letters in every word present in the specified network or route station names, separated by one dot based on the font used.

— Calculate the scrolling speed to show 6 average character widths in one s.

— Use the calculated scrolling speed and character width to determine the time the longest word (in average characters) is completely visible when scrolling.

— Check it is not less than 2 s.

— The same methodology applies for both saloon display and external side display.

NOTE For worked through example see Annex M.

Annex A
(normative)

PRM Signage

This annex identifies specific signage for use on both infrastructure and rolling stock.

A.1 Infrastructure signs

Infrastructure PRM signage dimensions shall be calculated according to the formula:

The minimum size of the enclosure of the written and graphic symbols shall be according to the formula: Reading distance in mm divided by 250, multiplied by 1,25 = frame size in mm, where a frame is utilised.

Generally the minimum dimension for a visible pictogram should be 85 mm by 85 mm except in areas where it shall be viewed closer than 2 m then it can be a minimum of 25 mm by 25 mm.

The signs provided shall have a dark blue background and a white symbol. Dark blue shall have a minimum contrast relative to white according to EN 16584-1 Figure A.2.

Where those signs are placed on a dark panel (surface), it is allowed to invert the colours of the symbol and the background (i.e. dark blue symbol on a white background).

A.2 Rolling stock signs

The minimum tile size of rolling stock interior PRM signs shall be 60 mm by 60 mm.

The minimum tile size of rolling stock exterior PRM signs shall be 85 mm by 85 mm.

NOTE 1 These dimensions only apply to the prescribed signs in this Annex (A3, A4, A5, A6).

NOTE 2 Generally for pictograms other than A3, A4, A5, A6, the minimum dimension for a pictogram in areas where it should be viewed closer than 2 m can be a minimum of 25 mm by 25 mm.

The signs provided shall have a dark blue background and a white symbol. Dark blue shall have a minimum contrast relative to white according to EN 16584-1 Figure A.2.

Where those signs are placed on a dark panel (surface), it is allowed to invert the colours of the symbol and the background (i.e. dark blue symbol on a white background).

For all additional PRM specific signs and labels the following shall apply:

- the colour requirements according to Table A.2
- where applicable, the tactile requirements according to Annex B
- the requirements according to Annex F and the height of the characters shall be determined by the formula: (reading distance in mm / 250) where the minimum reading distance used shall be 1 000 mm.

A.3 International wheelchair sign

The sign conforming to the international symbol for ‘PRM’ according to ISO 7000 symbol 0100 or ISO 7001 symbol PIPF006, which identifies PRM and wheelchair accessible areas, shall meet the following criteria:

— shall have a dark blue background and a white symbol.

— Dark blue shall have a minimum contrast relative to white according to EN 16584-1 Figure A.2.

— Where those signs are placed on a dark panel (surface), it is allowed to invert the colours of the symbol and the background (i.e. dark blue symbol on a white background).

Table A.1 shows examples of colours for use on an international wheelchair

Symbol	Background
RAL 9003 Signal white	RAL 5022 Night blue
NCS S 0500-N	NCS S 6030-R70B
C0 M0 Y0 K0	Pantone 274 EC (C100 M100 Y0 K38)

A.4 Inductive loop (coupling) sign

The sign indicating where inductive loops (coupling) are fitted shall comply with the symbol in ETSI EN 301 462 (2000-03) and shall meet the following criteria:

— shall have a dark blue background and a white symbol.

— Dark blue shall have a minimum contrast relative to white according to EN 16584-1 Figure A2.

— Where those signs are placed on a dark panel (surface), the colour of the symbol and the background can be inverted (i.e. dark blue symbol on a white background).

Table A.2 — shows examples of colours for use on inductive loop (coupling) sign

Symbol	Background
RAL 9003 Signal white	RAL 5022 Night blue
NCS S 0500-N	NCS S 6030-R70B
C0 M0 Y0 K0	Pantone 274 EC (C100 M100 Y0 K38)

A.5 Call for aid

The sign indicating where there is a call for aid shall be indicated by a bell symbol that complies with ISO 7000 symbol 2301.

A.6 Priority seating signs

The sign indicating where there is Priority seating shall comply with clause A.2 and Figure A.1 and shall meet the following criteria:

— shall have a dark blue background and a white symbol.

— Dark blue shall have a minimum contrast relative to white according to EN 16584-1 Figure A.2.

— Where those signs are placed on a dark panel (surface), the colour of the symbol and the background can be inverted (i.e. dark blue symbol on a white background).

Table A.4 — shows examples of colours for use on priority seating sign

Symbol	Background
RAL 9003 Signal white	RAL 5022 Night blue
NCS S 0500-N	NCS S 6030-R70B
C0 M0 Y0 K0	Pantone 274 EC (C100 M100 Y0 K38)

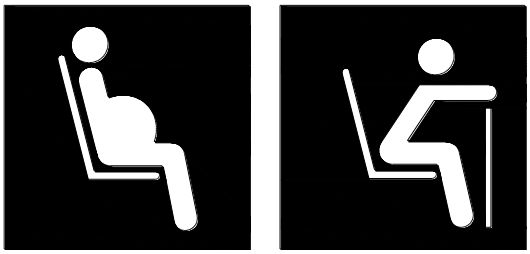

Figure A.1 — Priority seating symbol

Annex B
(normative)

Tactile Characteristics

This Annex identifies tactile characteristics for use on both infrastructure and rolling stock.

B.1 Tactile Pictograms and Characters

Tactile pictograms and characters shall be embossed (raised) not engraved.

- The embossed elements shall be a minimum of 0,5 mm above the surrounding surface. (recommended to be 0,5 mm to 1,5 mm)
- The embossed elements shall be square edged (i.e. not rounded or sharp).
- The character or pictogram spacing shall allow for both sides of the embossed letter, number or symbol to be felt with the fingers in a single pass.
- Inter-character spacing shall be increased (above standard printed character spacing) between 20 and 30 % depending on selected font. (WC or SOS are not required to have increased spacing)
- The inter-word spacing shall be increased (above standard printed character spacing) by approximately 25 %
- The minimum character or number height shall be 15 mm up to a maximum of 20 mm.
- Minimum stroke width of 1 mm shall be used for a 15 mm high character or number and pro-rata for larger character or number up to the maximum of 1.5 mm. This shall be measured at the base of the character or number where it joins the surface.

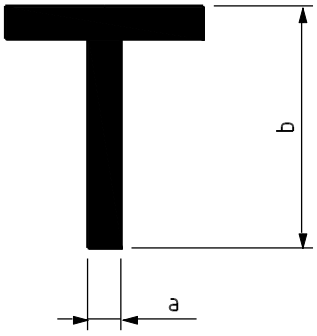

Key
a stroke width
b character height

Figure B.1 — Stroke width

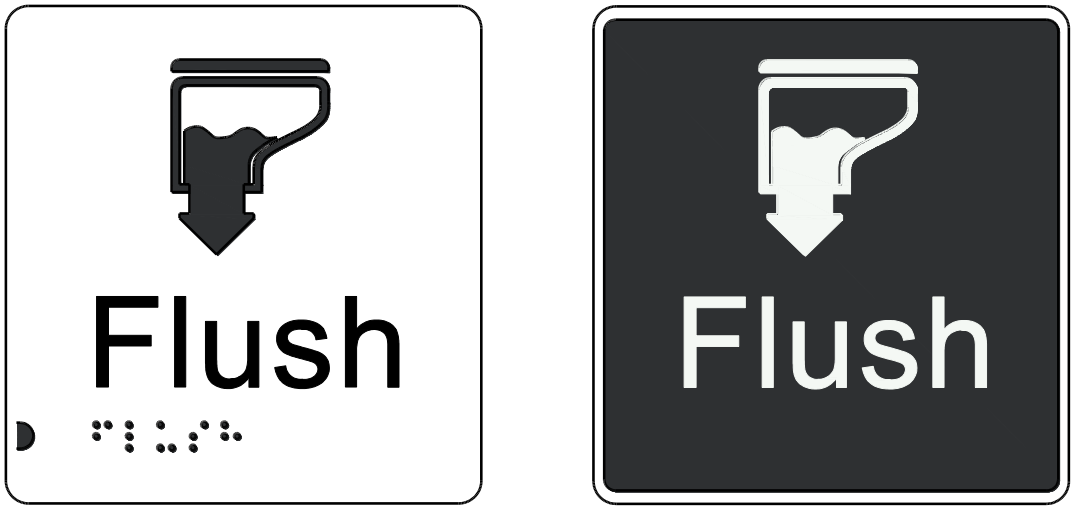

Figure B.2 — Example sign showing the tactile elements on the right and the visual elements on the left version

B.2 Tactile Controls

For tactile controls the raised element of the control shall be a minimum of 3 mm above the surrounding surface – if there is a clustering of several controls on a raised bezel it is only the bezel that needs to be raised by 3 mm not each individual control which should then be raised by a minimum of 1mm above the bezel surface.

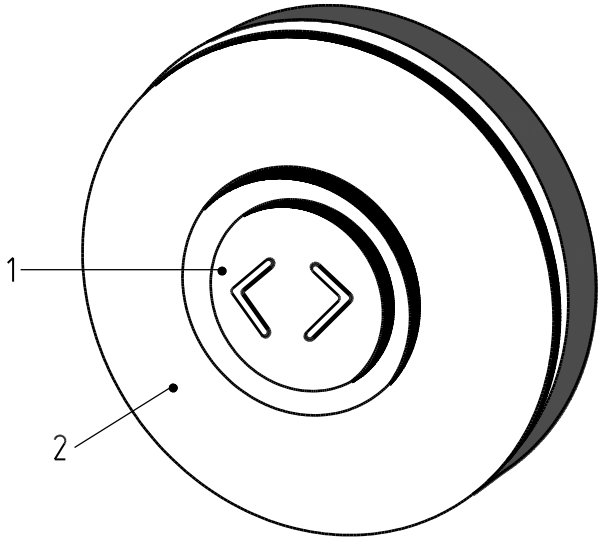

Key
1 Pressel
2 Bezel

Figure B.3 — Shows a pressel (button) raised 3 mm from the bezel (surround)

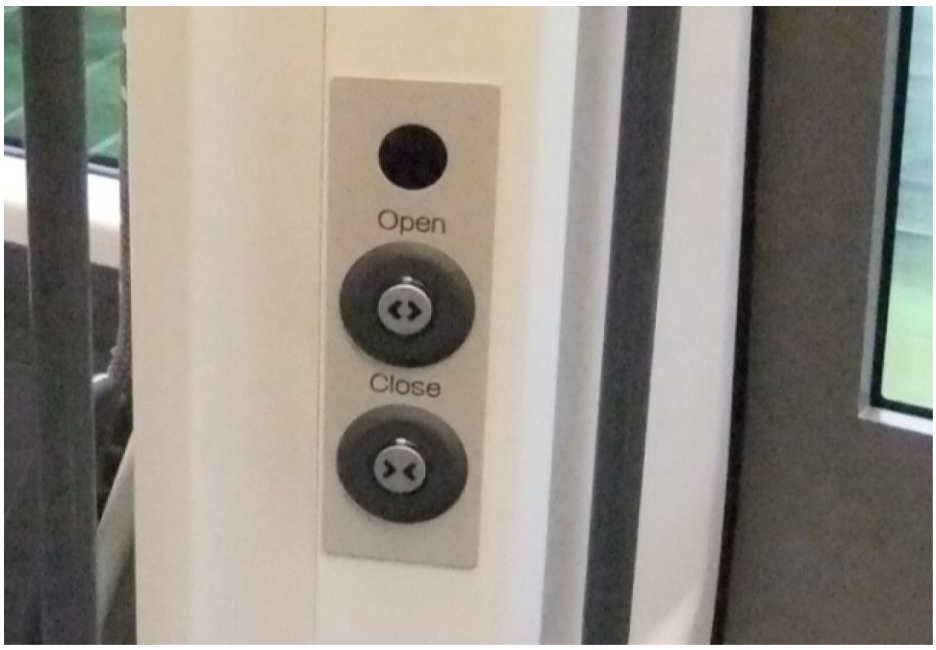

Figure B.4 — Example door control panel with tactile pushbuttons

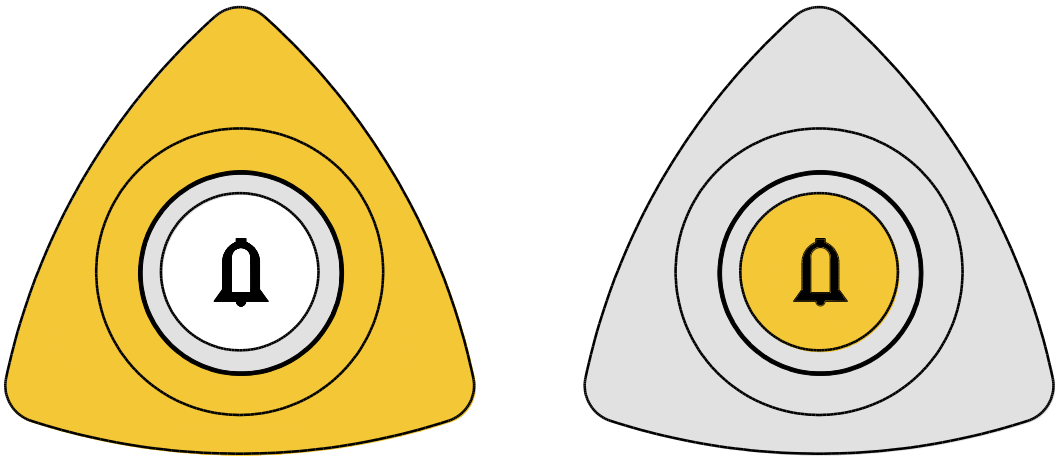

Figure B.5 — Example passenger 'call for aid devices'

B.3 Tactile Feedback or Tactile Indication

When a control device has been activated by a user there shall be positive confirmation of that activation by a distinct and discernible movement from one position to another.

Annex C
(normative)

Eye point Dimensions

This Annex identifies eye point dimensions for use within this standard.

For assessment the dimensions for eye points shall comply with Table C.1 unless national data is available for the assessment.

Table C.1 — Eye point dimensions for PRMs in both the standing position and sat in a wheelchair

Dimension in mm	5th percentile female	95th percentile male
Standing eye height including applicable shoe correction	1 442	1 840
Wheelchair user eye height, including corrections	1 110	1 383

Annex D
(normative)

Visual acuity for Displays

.

This annex identifies the inter-relationship between minimum character height, visual acuity and illuminance of the electronic displays used in both infrastructure and rolling stock.

Prescriptive character height requirements in clause 5 shall be used as a minimum (this is assumed to give a minimum visual acuity of 0,5 with a relative luminance level). Where possible, it is recommended that a visual acuity of 0,1 should be targeted.

The required character size at a given contrast depends on the viewing distance and the lighting level. The following describes a model which allows the determination of the necessary character height for characters with a contrast of at least 0.6. It assumes a viewing direction perpendicular to the media. For viewing directions oblique to the information carriers – typically for overhead displays – distortions are to be expected and for self-luminescent displays contrast reductions may occur. For a still permissible angle of 30° between the viewing direction and the normal of the information carrier the required minimum observer distance can be determined from geometry of the arrangement at a given inclination of the information carrier as shown in figure D.1. From the method specified the required character height for this observer distance can be determined for a visual acuity of 0.1 according to table D.1.

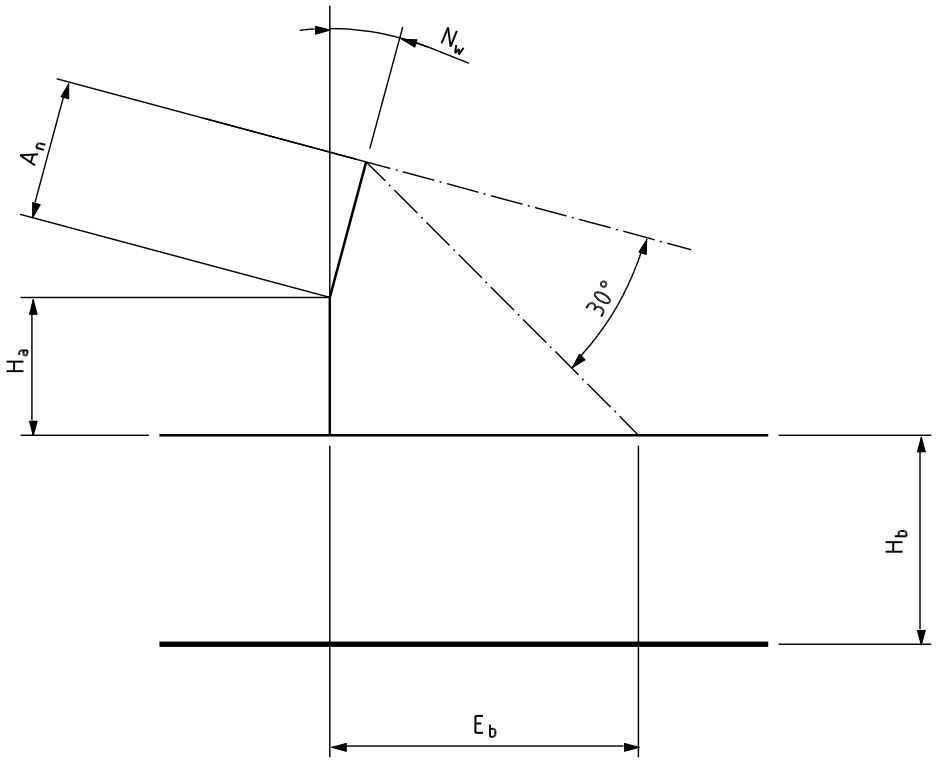

Key

E_b observer distance, in m;
A_n height of information carrier, in m;

N_w angle of inclination of information carrier, in degrees;
H_a height of bottom edge of information carrier above observer eye, in m;
H_b height of observer eye above ground, in m;

Figure D.1 - Diagram for establishing the necessary observer distance

The necessary observer distance results from the arrangement geometry according to equation (D.1):

$$E_b = A_n \times \sin N_w + (H_a + A_n \times \cos N_w) \times \tan (60° - N_w) \quad \text{(D.1)}$$

The determination of the minimum character height based on the viewing distance (Se) referred to for a centred view on the information carrier can be carried out using equation (D.2):

$$Se = [(E_b - A_n / 2 \times \sin N_w)^2 + (H_a + A_n / 2 \times \cos N_w)^2]^{0,5} \quad \text{(D2)}$$

Table D.1 – Minimum observer distance (E_b) and minimum character height (h_m), rounded

Height of information carrier A_n [m]	Height above observer H_a [m]	Angle of inclination Nw of information carrier											
		0°		1°		2°		3°		4°		5°	
		E_b [m]	h_m [mm]	E_b [m]	h_m [mm]	E_b [m]	h_m [mm]	E_b [m]	h_m [mm]	E_b [m]	h_m [mm]	E_b [m]	h_m [mm]
0,30	1,00	2,30	41	2,20	40	2,10	39	2,05	38	1,95	37	1,90	36
	1,50	3,15	57	3,05	56	2,90	54	2,80	53	2,70	51	2,60	50
	2,00	4,00	73	3,85	71	3,70	69	3,60	68	3,45	65	3,35	64
0,60	1,00	2,80	50	2,70	49	2,60	47	2,50	46	2,45	45	2,35	44
	1,50	3,65	66	3,55	64	3,40	62	3,30	61	3,20	59	3,05	57
	2,00	4,55	82	4,35	79	4,20	77	4,05	75	3,90	73	3,80	71

The recognisability and legibility of a sign (a character) depends mainly on the size of the sign, the contrast of the sign against its background, the luminance of the environment, which is usually equated with the adaptation luminance of the observer, and the presentation time. Besides, the recognisability and legibility of a sign is influenced by its form and shape, the size of the environment, the adaptation and accommodation state of the observer's eye, the movement and possibly the colour of the sign. Furthermore, experience, self-confidence, and motivation of the observer can be relevant, too. And not least, the recognisability of a sign is determined also by the visual performance which generally decreases with increasing age. The most important criteria to describe the visual performance is the visual acuity. The visual acuity is defined as the threshold of the capacity of the eye to perceive fine details of a visual object (a sign), the recognisability of which depends on the visual angle. The value of the visual acuity (visus) is the reciprocal value of the visual angle α measured in minutes of arc, at which the detail of the presented visual object is still scarcely recognisable. For visual objects (signs) with a high contrast (Michelson contrast K between 0,6 and 0,9) against the environment, such as black print on white or white print on black background, the minimum character size (in points) necessary recognising / reading can be determined, taking into account the viewing distance Se and the visual acuity V_K principally depending on the age and the adaptation luminance:

$$P = a \times Se / V_K + b \quad (D.3)$$

Where:

P minimum character size, in points (1 points corresponds to 0,3528 mm);
a, b constants depending on font type, for sans-serif fonts a = 6,4 and b = 3,0;
Se viewing distance in m;
V_k visual acuity, corrected for the given adaptation luminance.

The relative dependence of the visual acuity V on the adaptation level can be taken into account by a visual acuity correction factor K_S indicated in table E.1.

$$V_K = K_S \times V \quad (D.4)$$

Where:

V visual acuity for a reference luminance of 100 cd/m^2.

NOTE In principle, the visual acuity also depends on the age of the observer and on the viewing distance. This can remain unconsidered here, as in the following visual acuities between 0,1 and 1,0 is to be assumed.

The minimum character height h_m (in mm) results from the minimum character size P (in points) by conversion with the factor f_{70} to:

$$h_m = f_{70} \times P \quad (D.5)$$

Where:

h_m minimum character height in mm; corresponding to the height of the vertical line of the uppercase letter H

f_{70} conversion factor, assuming that the character height is 70% of the font size, the following applies

$$f_{70} = 0,7 \times 0,352\ 8 \text{ mm} = 0,246\ 9 \text{ mm} \quad (D.6)$$

Table D.2 – Visual acuity correction factor K_s as function of adaptation luminance, relative to the value for a luminance of 100 cd/m²

Luminance cd/m²	**K_S-Factor**	**Luminance** cd/m²	**K_S-Factor**	**Luminance** cd/m²	**K_S-Factor**	**Luminance** cd/m²	**K_S-Factor**
0,1	0,271 0	1,0	0,514 0	10	0,757 0	100	1,000 0
0,2	0,344 2	2,0	0,587 2	20	0,830 2	200	1,035 8
0,3	0,386 9	3,0	0,629 9	30	0,872 9	300	1,056 8
0,4	0,417 3	4,0	0,660 3	40	0,903 3	400	1,071 6
0,5	0,440 8	5,0	0,683 8	50	0,926 8	500	1,083 2
0,6	0,460 1	6,0	0,703 1	60	0,946 1	600	1,092 6
0,7	0,476 4	7,0	0,719 4	70	0,962 4	700	1,100 6
0,8	0,490 5	8,0	0,733 5	80	0,976 5	800	1,107 5
0,9	0,502 9	9,0	0,745 9	90	0,988 9	900	1,113 6
						1 000	1,119 0

Figures E.2 to E.6 show the minimum character heights for viewing distances Se of 0,10 m, 0,50 m, 1,00 m, 5,0 m and 10,0 m and for selected visual acuities V of 0,1, 0,2, 0,3, 0,5 and 1,0 for the luminance range between 0,1 cd/m^2 and 100 cd/m^2 indicated in table E.2 determined using the model described here.

Where:

y minimum character height in mm
x adaptation luminance in cd/m^2

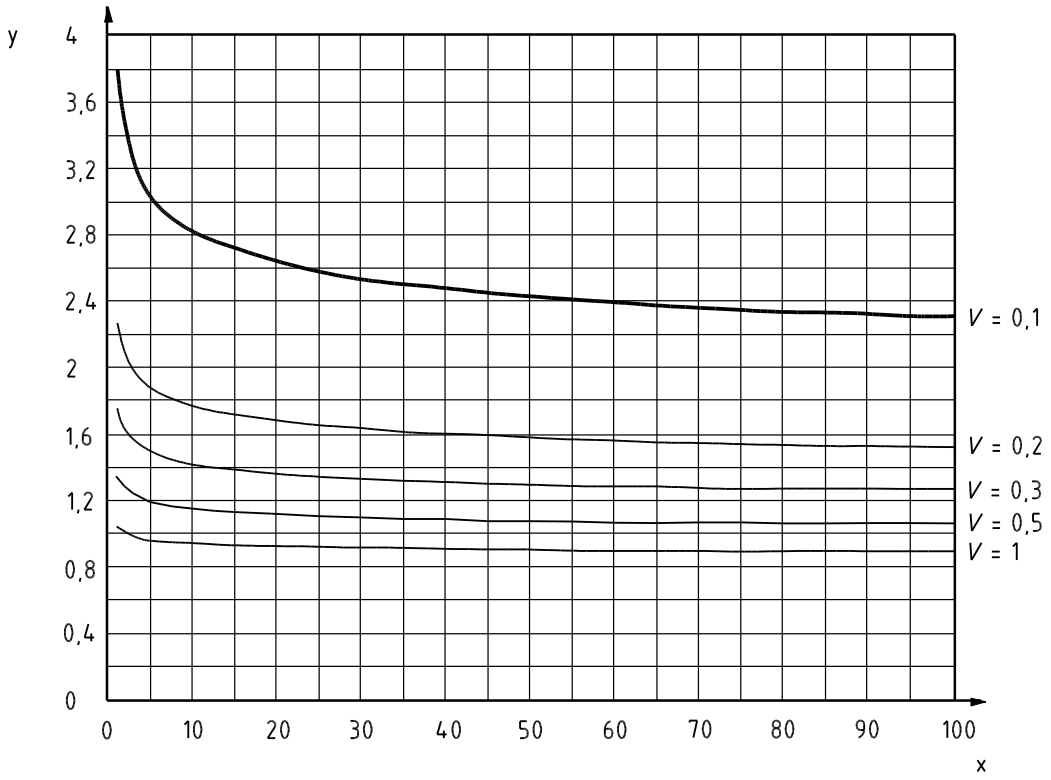

Figure D.2 – Minimum character height as function of adaptation luminance for selected visual acuities V; viewing distance Se = 100 mm

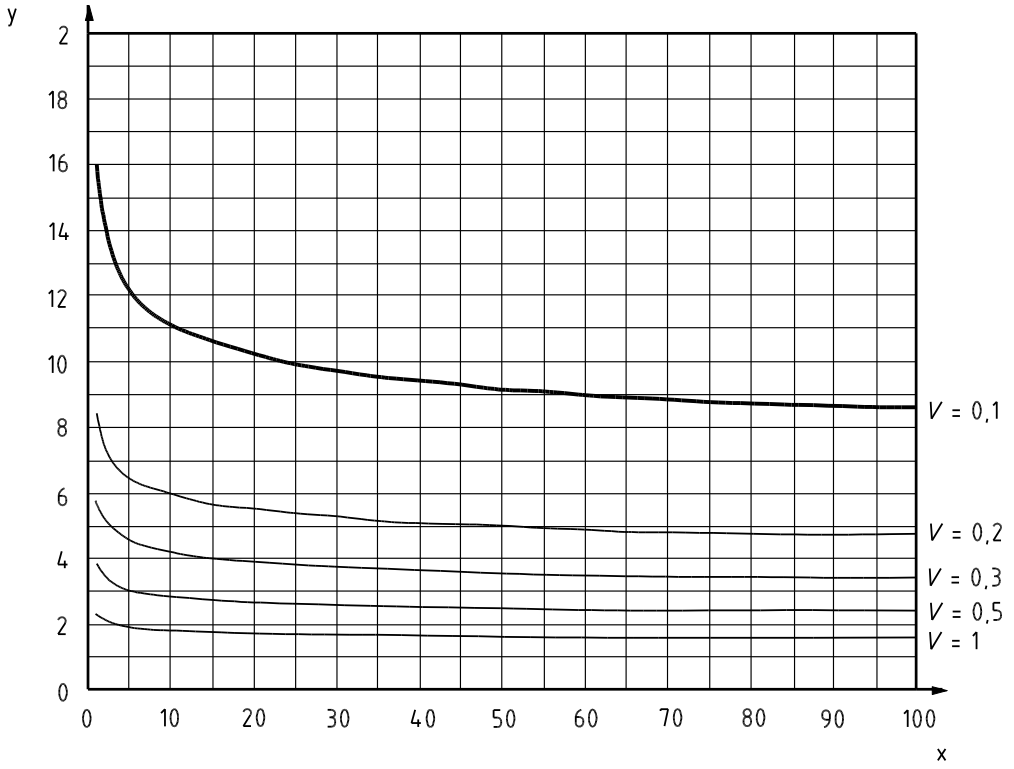

Figure D.3 – Minimum character height as function of adaptation luminance for selected visual acuities V; viewing distance Se = 500 mm

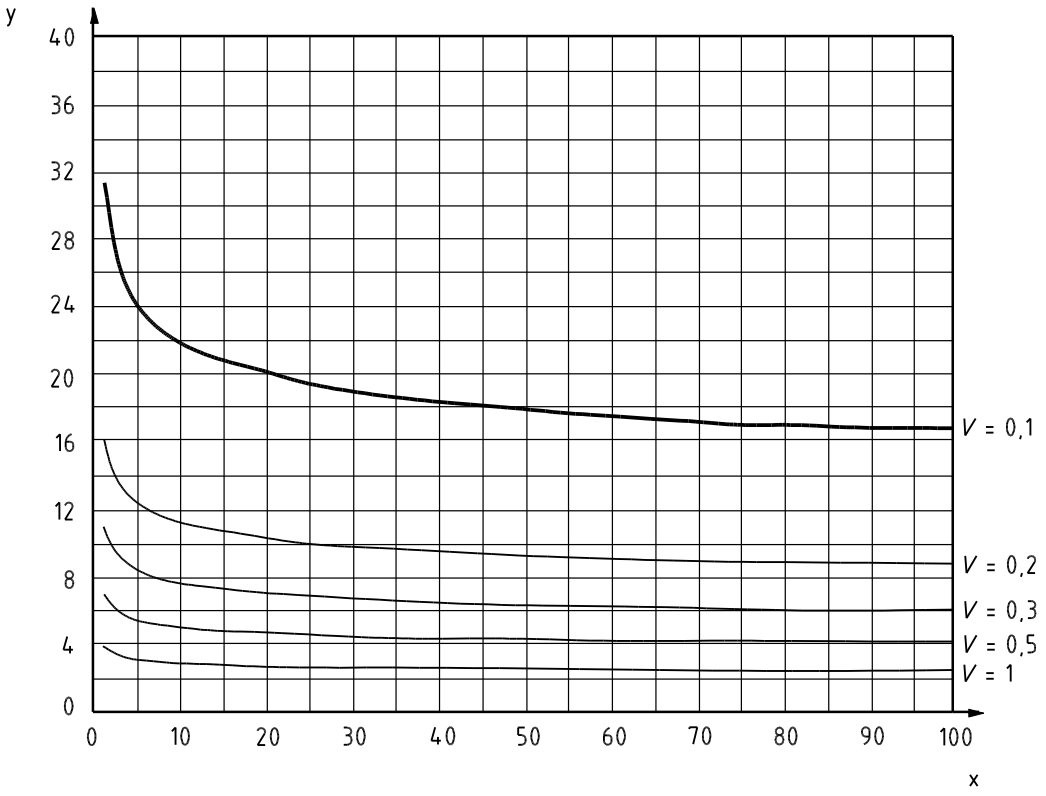

Figure D.4 – Minimum character height as function of adaptation luminance for selected visual acuities V; viewing distance Se = 1000 mm

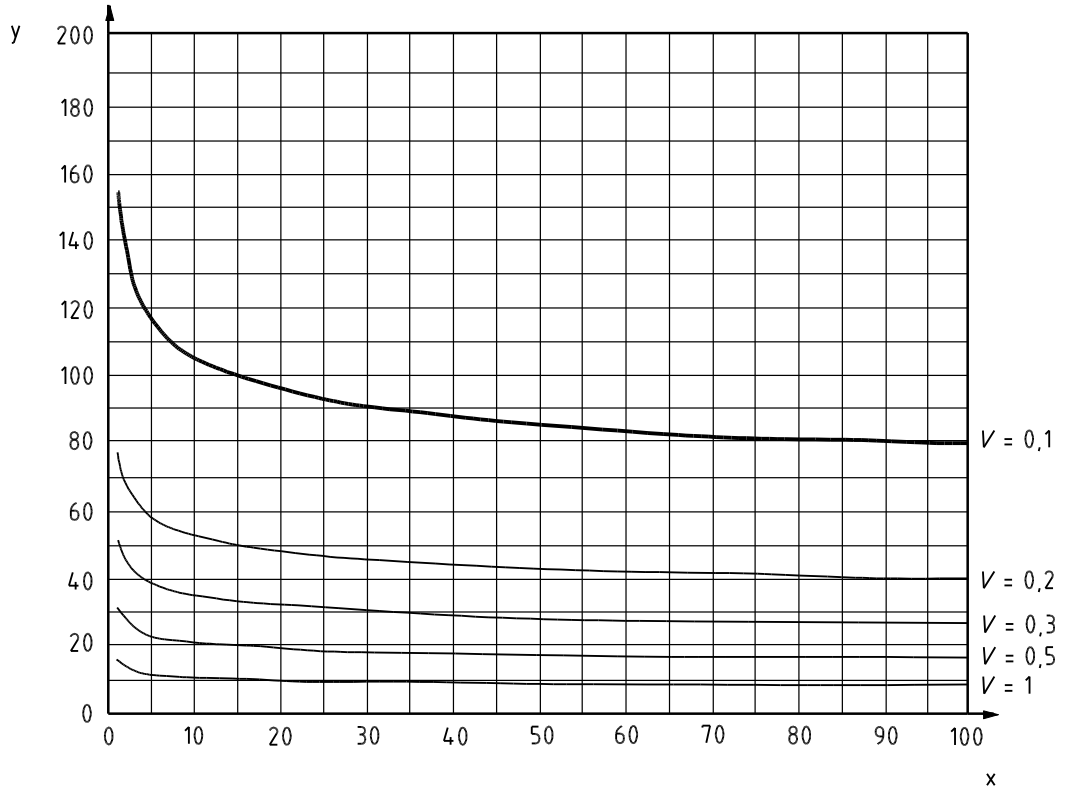

Figure D.5 – Minimum character height as function of adaptation luminance for selected visual acuities V; viewing distance Se = 5000 mm

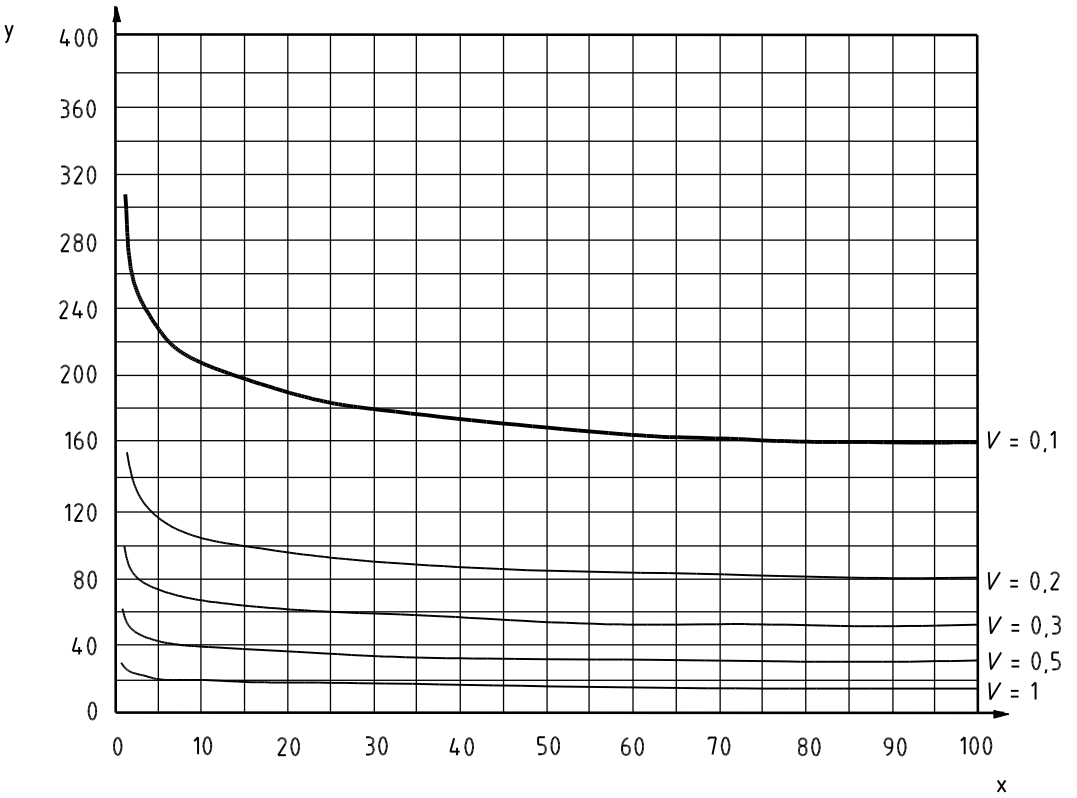

Figure D.6 – Minimum character height as function of adaptation luminance for selected visual acuities V; viewing distance Se = 10000 mm

Annex E
(normative)

Specific Braille Requirements

This Annex identifies the specific requirements when using braille on signage for use on both infrastructure and rolling stock.

National standard Braille shall be used wherever Braille characters are used.

The Braille dot shall be dome shaped. Grade I Braille (a letter-by-letter transcription used for basic literacy) shall be used for single words, and a locator shall be incorporated.

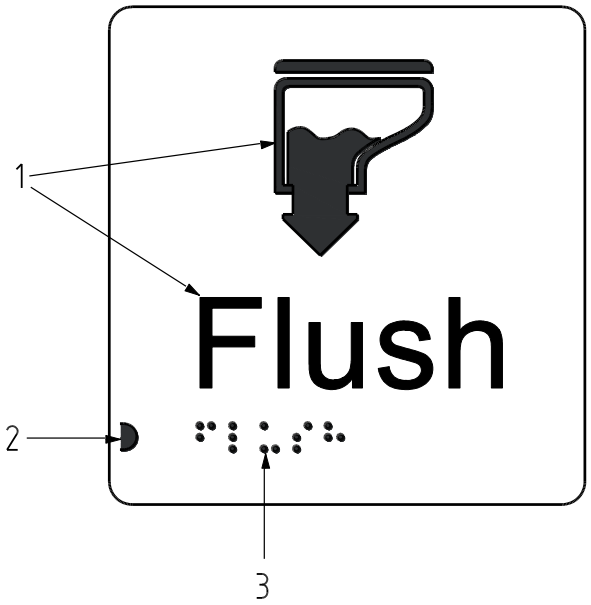

Key
1 Tactile symbol and characters
2 Braille locator
3 Braille characters

Figure E.1 — Key components of a tactile sign including Braille components

Annex F
(normative)

Characteristics of 'easily readable'

Assessment as being 'easily readable' shall be by meeting the following characteristics:

1) Use of a defined Sans Serif typeface. See Figure F.1 and Figure F.2 for illustrations of serifs. See Annex N for examples of compliant typefaces

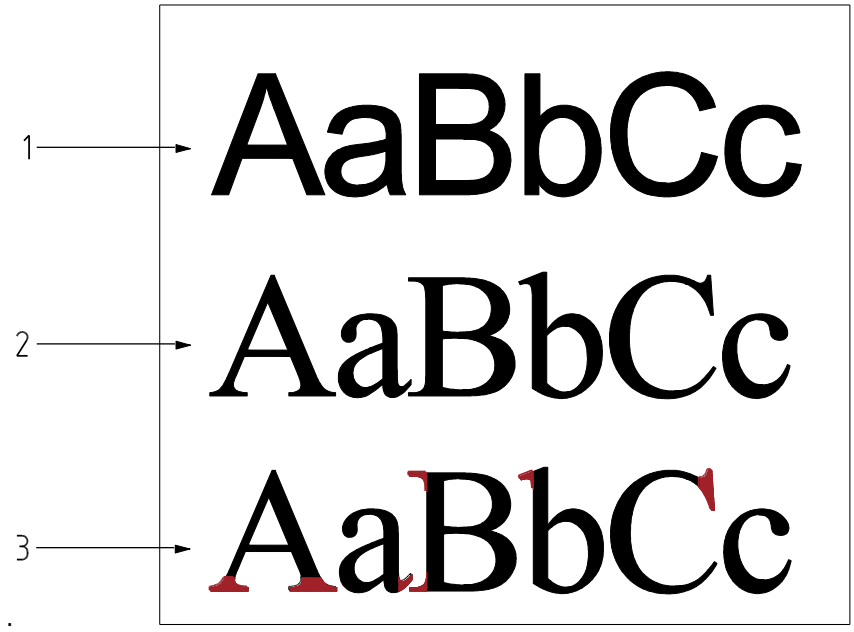

Key

1 Sans-serif font
2 Serif font
3 Serif font (serifs in red)

Figure F.1 — Example highlighting serifs in red

Serif font **Sans-serif font**

Key
1 serif

Figure F.2 — Example showing serifs circled

2) Use of mixed case shall be used for all written information (not in uppercase letters only).See Figure F.3

CAPITAL OR UPPERCASE LETTERS ONLY

lowercase letters only

Mixed or Title Case Letters

Figure F.3 Example of upper, lower and mixed case

3) Use of clearly recognisable descenders and ascenders

Key
a Baseline
b Descender height
c Ascender height
d x-height of character
e Uppercase character height

Figure F.4 — Key elements of a typeface

i) Compressed descenders and ascenders shall not be used.

— When the ascender has been compressed or squashed or misaligned and does not use a consistent x-height and/or ascender height, this would be non compliant to the requirement. See Figure F.5 and Figure F.6.

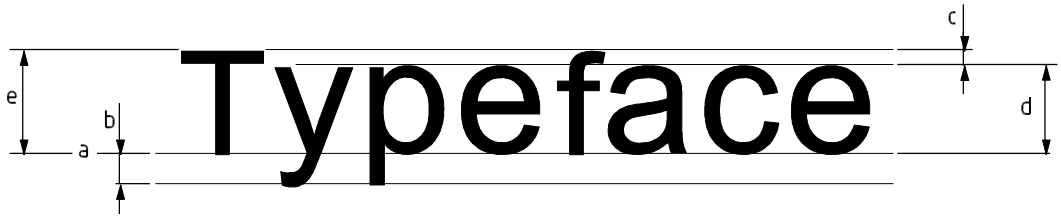

Key
a Baseline
b Descender height
c Ascender height
d x-height of character
e Uppercase character height

Figure F.5 — Example showing compressed ascenders

— When the descender has been compressed or squashed or misaligned and does not use a consistent x-height and/or descender height, this would be non compliant to the requirement. See Figure F.6 and Figure F.7

Key
a Baseline
b Descender height
c Ascender height
d x-height of character
e Uppercase character height

Figure F.6 — Example showing compressed descenders

Key
a Baseline
b Descender height
c Ascender height
d x-height of character
e Uppercase character height

Figure F.7 — Example showing compressed ascenders and misaligned descenders

ii) Descenders in Roman script shall be clearly recognisable and have a minimum size ratio of 20 % to the uppercase characters height (See Figure F.8).

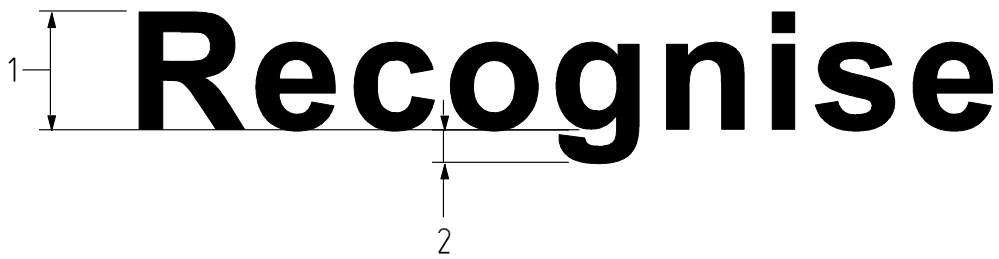

Key

1 Uppercase character height
2 Descender shown as a minimum 20 % of uppercase character height

Figure F.8 — Example of compliant descender in Roman script

Annex G
(normative)

Passenger external doors audible signals

G.1 General

This Annex contains the specific characteristics for the opening and closing audible signals for external doors. These characteristics are required to aid PRMs in locating the doors and door controls and / or warning of their operation during the different states of the door operating sequence.

Measurement of the specific characteristics in G.2 and G.3 for assessment of compliance shall be according to applicable European Laws and standards.

G.2 Door opening - Characteristics

- A slow pulse multi tone (up to 2 pulses per s) of 2 tones emitted sequentially.
- Frequencies
    - 2 200 Hz ± 100 Hz
- and:
    - 1 760 Hz ± 100 Hz
- Sound Pressure level
    - To be provided by either:
    - an adaptive audible device set at 5 dB LAeq min above ambient up to a max of 70 dB LAeq,T (+ 6/- 0)
    - or a non-adaptive device set at 70 dB LAeq,T (+ 6/- 0)
    - Internal measurement on the centre point of the vestibule at a height of 1,5 m above the floor level. (T = total duration of the sound event).
    - External measurement, 1,5 m away from the body side door centreline at 1,5 m above the platform level. (T = total duration of the sound event).

G.3 Door close - Characteristics

- A fast pulsed tone (6-10 pulses per s)
- Frequency
    - 1 900 Hz ± 100 Hz
- Sound Pressure level

— To be provided by either:-

— an adaptive audible device set at 5 dB LAeq min above ambient up to a max of 70 dB LAeq,T (+ 6/- 0)

— or a non-adaptive device set at 70 dB LAeq,T (+ 6/- 0))

— Internal measurement on the centre point of the vestibule at a height of 1,5 m above the floor level. (T = total duration of the sound event).

— External measurement, 1,5 m away from the body side door centreline at 1,5 m above the platform level. (T = total duration of the sound event).

Annex H
(normative)

EC verification

H.1 Interoperability constituents

H.1.1 Conformity assessment

An EC declaration of conformity or suitability for use shall be drawn up by the manufacturer or his authorised representative established in the Union before placing an interoperability constituent on the market.

The conformity assessment of an interoperability constituent shall be according to the prescribed module(s) of that particular constituent specified in H.1.2 of this standard.

H.1.2 Application of modules

The modules for the EC certification of conformity of interoperability constituents are listed in the table below:

Table H.1: Modules for EC certification of conformity of interoperability constituents

Module CA	Internal production control
Module CA1	Internal production control plus product verification by individual examination
Module CA2	Internal production control plus product verification at random intervals
Module CB	EC-Type examination
Module CC	Conformity to type based on internal production control
Module CD	Conformity to type based on quality management system of the production process
Module CF	Conformity to type based on product verification
Module CH	Conformity based on full quality management system
Module CH1	Conformity based on full quality management system plus design examination
Module CV	Type validation by in service experience (Suitability for use)

The manufacturer or his authorised representative established within the Union shall choose one of the modules or module combinations indicated in the following table for the constituent to be assessed:

Table H.2: Combination of modules for EC certification of conformity of interoperability constituents

Clause	Constituents to be assessed	Module CA	Module CA1 or CA2*	Module CB +CC	Module CB +CD	Module CB +CF	Module CH*	Module CH1
5.2.11	Displays		X	X	X		X	X
5.3.4	Toilets		X	X	X		X	X
5.3.6	Internal and External Displays		X	X	X		X	X
5.3.7	Call for aid device	X		X			X	

(*) Modules CA1, CA2 or CH may be used only in the case of products manufactured according to a design developed and already used to place products on the market before the application of relevant TSIs applicable to those products, provided that the manufacturer demonstrates to the notified body that design review and type examination were performed for previous applications under comparable conditions, and are in conformity with the requirements of the relevant TSI; this demonstration shall be documented, and is considered as providing the same level of proof as module CB or design examination according to module CH1.

H.2 Subsystems

H.2.1 EC verification (general)

The EC verification procedure shall be performed according to the prescribed modules(s) specified in point H.2.2 of this standard.

For the infrastructure subsystem, if the applicant demonstrates that tests or assessments of a subsystem or parts of a subsystem are the same or have been successful for previous applications of a design, the notified body shall consider the results of these tests and assessments for the EC verification.

The approval process and the contents of the assessment shall be defined between the applicant and a notified body according to the requirements defined in the relevant TSI and in conformance with the rules set out in section 7 of this TSI.

H.2.2 Procedures for EC verification of a subsystem (modules)

The modules for the EC verification of subsystems are listed in the table below:

Table H.3: Modules for the EC verification of subsystems

Module SB	EC-type examination
Module SD	EC verification based on quality management system of the production process
Module SF	EC verification based on product verification
Module SG	EC verification based on unit verification
Module SH1	EC verification based on full quality management system plus design examination

The applicant shall choose one of the modules or module combinations indicated in Table H.4.

Table H.4: Combination of modules for the EC verification of subsystems

Subsystem to be assessed	Module SB+SD	Module SB+SF	Module SG	Module SH1
Rolling Stock Subsystem	X	X		X
Infrastructure Subsystem			X	X

The characteristics of the subsystem to be assessed during the relevant phases are indicated in Annex I, Table I.1 for infrastructure subsystem and Table I.3 for rolling stock subsystem. The applicant shall confirm that each subsystem produced complies with the type.

Annex I
(normative)

Summary of testing requirements

The sub-system characteristics that shall be assessed in the different phases of design, development and production are marked by 'X' in Table I.1 for Infrastructure subsystem.

Table I.1 — Test Plan for Infrastructure requirements

Assessment of the Infrastructure subsystem (constructed and supplied as single entity)		
Feature to be tested (all sub-clauses included)	**Design and development phase**	**Construction phase**
	Design review and/or design examination	**Site Inspection**
5.2.1 Parking facilities for persons with disabilities and PRMs	X	(X)*
5.2.2 Obstacle-free route	X	(X)*
5.2.3 Doors and entrances	X	(X)*
5.2.4 Ticketing, information desks and customer assistance points	X	(X)*
5.2.5 Visual information: signposting, pictograms, printed or dynamic information	X	(X)*
5.2.6 Spoken information	X	X
5.2.7 Platform danger area and edges of platforms	X	(X)*
5.2.8 End of platforms	X	(X)*
5.2.10 Level track crossings	X	(X)*

* As-built drawings shall be provided or a site inspection shall be carried out when the realization differs from the design rules or drawings that were examined.

The sub-system characteristics that shall be assessed in the different phases of design, development and production are marked by X in Table I.2 for interoperable constituents.

Table I.2 — Test Plan for Interoperable Constituents

	Assessment in the following phase			
	Design and development phase			**Production phase**
Interoperability Constituents and characteristics to be assessed	**Design review and/or Design examination**	**Review of manufacturing process**	**Type test**	**Verification of conformity to type**

Interoperability Constituents and characteristics to be assessed	Assessment in the following phase			
	Design and development phase			Production phase
	Design review and/or Design examination	Review of manufacturing process	Type test	Verification of conformity to type
5.2.11 Displays	X		X	X
5.3.4 Toilets	X		X	X
5.3.6 Internal and External Displays	X		X	X
5.3.7 Call for aid devices	X		X	X

The sub-system characteristics that shall be assessed in the different phases of design, development and production are marked by X in Table I.3 for Rolling stock subsystem.

Table I.3 — Test Plan for Rolling Stock requirements

Characteristics to be assessed	Design and development phase		Production phase
	Design review and/or design examination	Type Test	Routine Test
5.3.1.1 Priority Seats	X		
5.3.2 Wheelchair spaces	X	X	
5.3.3 Doors	X	X	
5.3.4 Toilets	X		
5.3.5 Customer Information	X	X	
5.3.8 Wheelchair Accessible sleeping accommodation	X	X	

Annex J
(informative)

Good practice when using braille

This Annex provides general requirements regarding good practice when using braille on signage for use on both infrastructure and rolling stock.

J.1 General requirements for Braille

The general requirements for Braille include the following:

a basic Braille format should be used consisting of two columns and three lines, as in Figure J.1

individual Braille dots should be hemispherical and should not have any edges/burrs

Braille cells including blanks have identical fixed spacing.

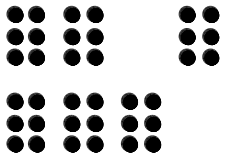

Figure J.1 — Example of Braille dots

Braille letters on signs consisting of several lines should be placed inline vertically

no use of the capitalization sign

where texts consist of several lines, the line spacing should be increased in order to improve readability

due to the fact that it is widely recognized, the Latin alphabet should be used for Braille cells

if Braille lettering is placed in a recess a free space of at least 15 mm should be kept around the cell

Braille lettering should be positioned in such a way that the readability of printed texts and signs (e.g. pictograms) should not be affected

layout of signs in Braille should be linear and horizontal (no vertical or circular layout).

J.2 Checking readability of Braille

If there is no requirement for checking the height of Braille characters or if no check has been carried out by the manufacturer, a readability test should be carried out by competent representatives of local associations for blind and visually impaired people. The result of this check should be recorded. The record should contain the following information:

1) number and qualification of blind Braille readers;

2) height of dots for the recognisability of Braille characters;

3) conformance with relevant criteria (state deviations if necessary);

4) the record shall be kept by the responsible station management or the railway undertaking.

J.3 Recommendations for Braille carrier material

Braille carrier material should be according to the following:

1) no reduction below the minimum height of Braille characters or individual dots e.g. due to environmental conditions or finger contact should happen over the design life;

2) the material should not have any deviations that could be confusing;

3) the surfaces should not be reflective;

4) resistance against vandalism, environmental conditions and corrosion;

5) thermal behaviour of material – when selecting materials the climatic effects, e.g. cold or heat causing ‘adhesion’ or ‘burns’, are to be considered;

6) no materials should be used which may cause allergic reactions.

J.4 The Braille cell

Each Braille cell consists of up to six predefined dots (see Figure J.2), set out in two columns of three.

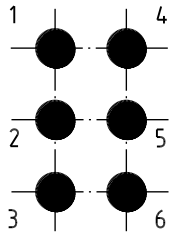

Figure J.2 — The Braille cell

The pattern of dots for a given character is defined in the national character set.

For Braille text visualisation, it is recommended that the dot positions that are raised in the Braille text are indicated by larger filled circles and the positions that are not used are shown as smaller dots. (See Figure J.3).The large black dots represent the position at which a raised dot shall appear in the text. The small black dot indicates that no raised dot shall appear in this position. (Some information sources may use other conventions.)

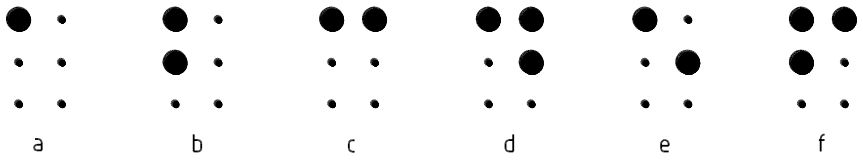

Figure J.3 — Braille text visualisation of characters "a" to "f"

J.5 Marburg medium spacing convention for Braille

The Marburg medium spacing convention and dimensions for Braille is illustrated in Figure J.4.

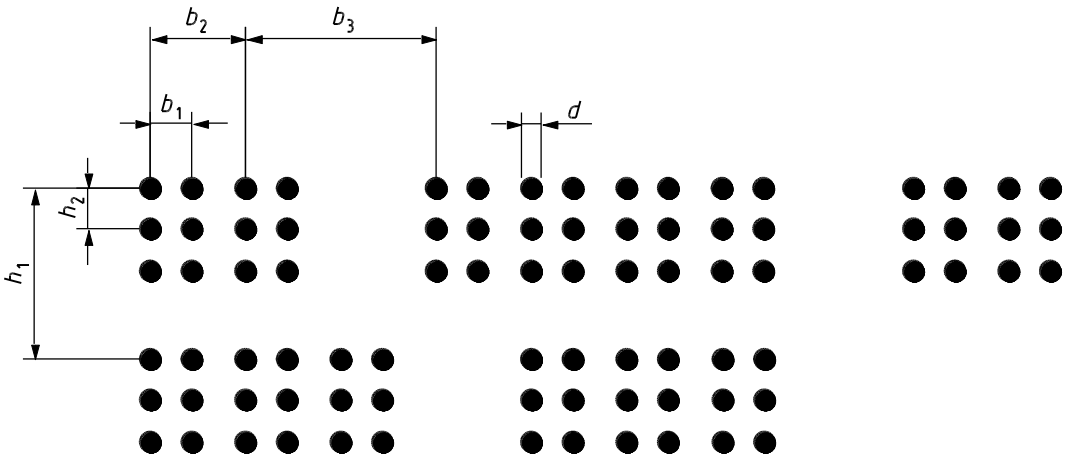

Key

Tolerances: ± 0.1 mm

b_1 2.5 mm horizontal distance between dot centres
b_2 6.0 mm between 2 letters of one word
b_3 12.0 mm hyphenation
d 1.6 mm diameter on the female matrix and on the artwork film/artwork file
h_1 10.0 mm line spacing
h_2 2.5 mm vertical distance between dot centres

Figure J.4 — Marburg medium spacing convention and dimensions for Braille

J.6 Braille character sets

Braille character sets consist of representations for letters, numbers, symbols, punctuation instructions and instructions to the Braille reader.

There is general agreement on certain Braille characters, particularly the main Latin alphabet. Examples of Braille symbols for letters that are in common use are given in Figure J.5, but there are certain national deviations from this character set.

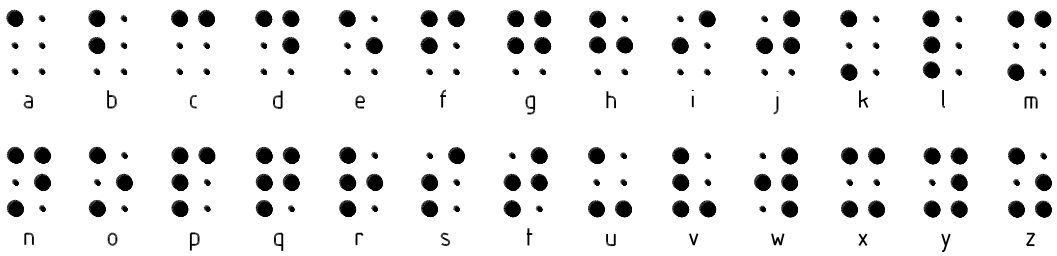

Figure J.5 — Braille transposition of letters in common use

There is not unanimity concerning the Braille symbols for numbers and accented letters and special characters including “/”, “%”. The character set used for a particular market should be in compliance with local requirements. Information on national character sets is available from http://ebu.rnib.org.uk. The European Blind Union (EBU) is attempting to harmonise Braille alphabets, special characters, symbols and abbreviations.

Annex K
(informative)

Pictograms Examples and ‘Good Practice’

This annex provides general guidance and examples regarding good practice when using pictograms on signage for use on both infrastructure and rolling stock.

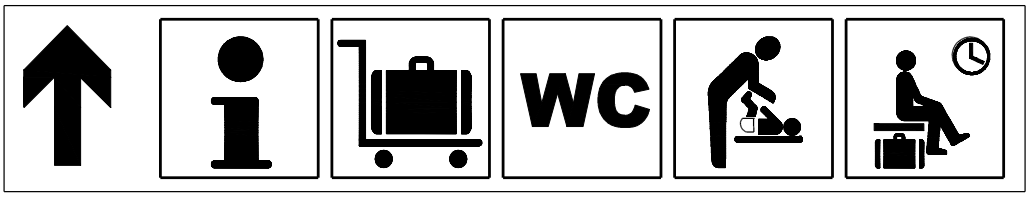

Figure K.1 — Example of 5 pictograms combined with a directional arrow

NOTE 1 5 pictograms is the maximum allowable on a single location.

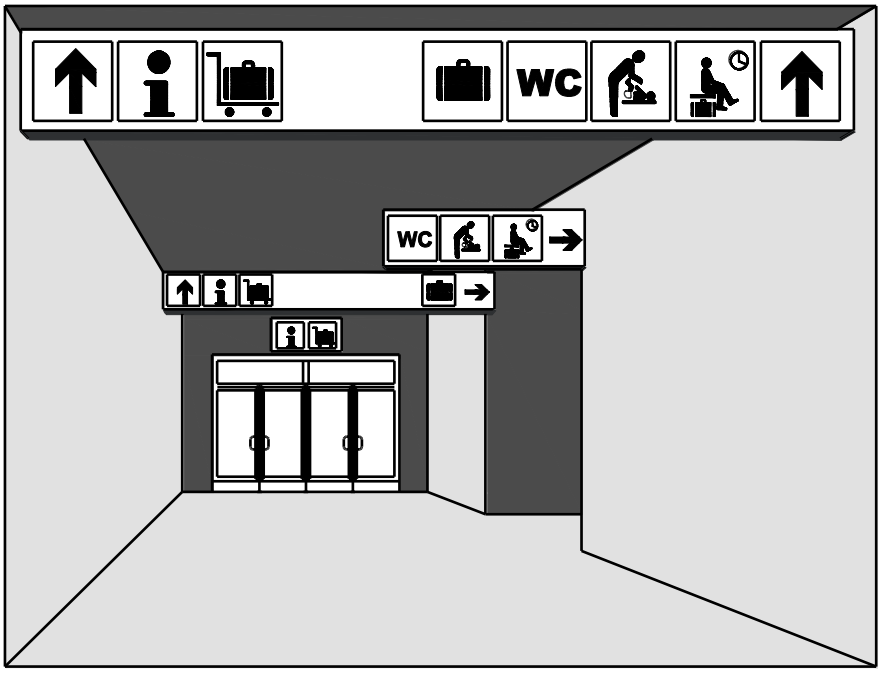

NOTE 2 The combined pictograms change over the route at route taking decision points.

Figure K.2 — Examples of combined pictograms with directional arrows (Infrastructure)

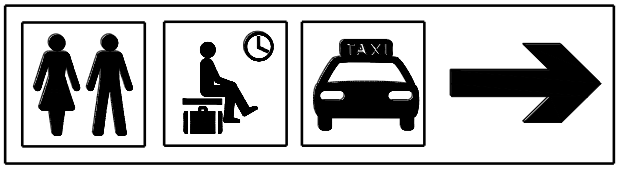

Figure K.3 — Examples of 3 combined pictograms with directional arrows (Infrastructure)

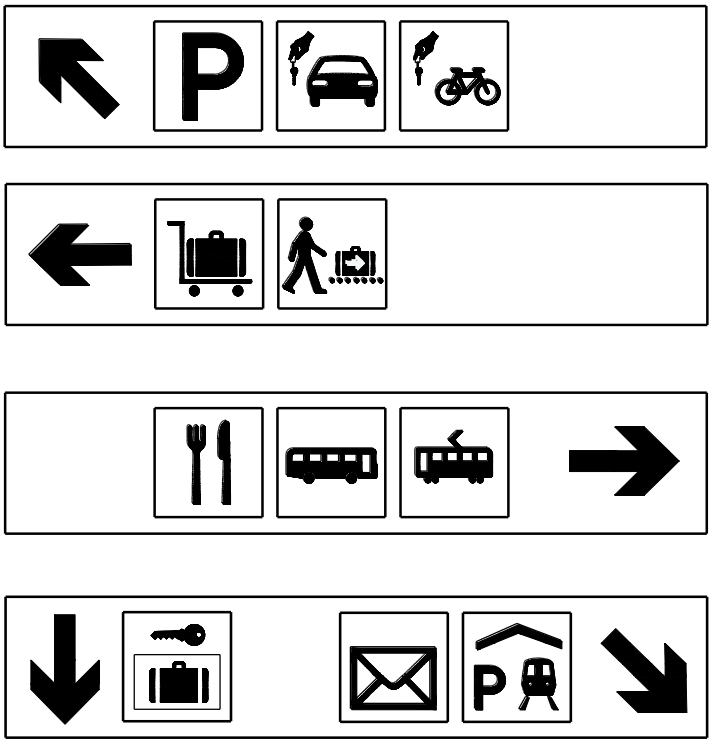

Figure K.4 — Examples of combined pictograms with directional arrows (Infrastructure)

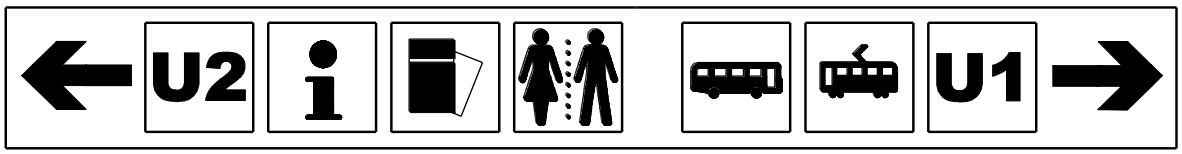

Figure K.5 — Examples of combined pictograms with directional arrows (Infrastructure)

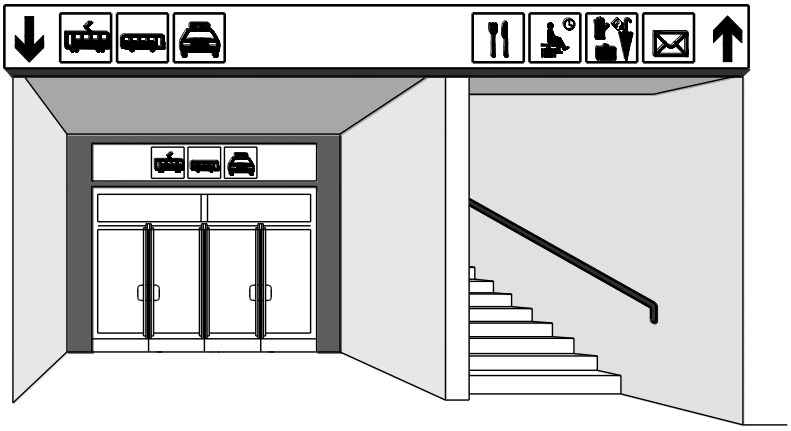

NOTE 3 The combined pictograms change over the route at route taking decision points.

Figure K.6 — Example of combined pictogram with directional arrow (Rolling Stock)

Figure K.7 — Example of combined pictograms (Rolling Stock)

Figure K.8 — Example of a Universal Toilet Hinged handrail sign

Figure K.9 — Example of alarm or call for aid device functional instructions sign

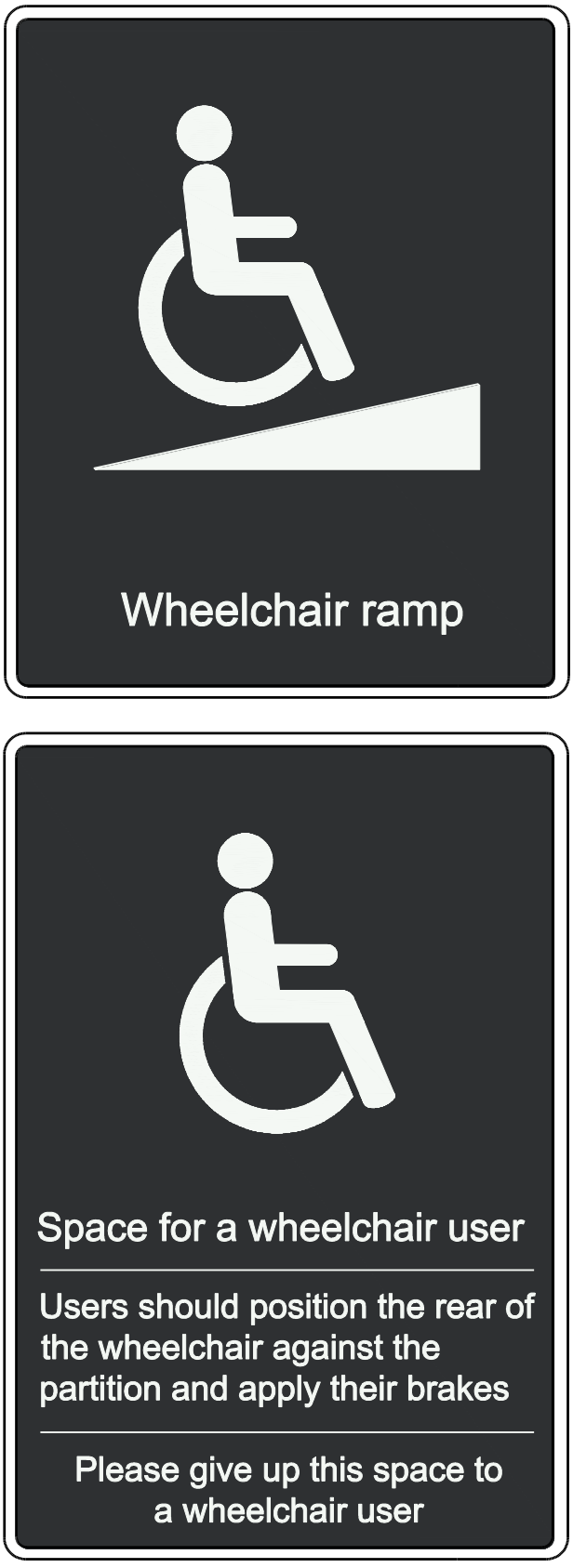

Figure K.10 — Examples of a wheelchair sign

Annex L
(informative)

Examples of Toilet Control Device Good Practice

This Annex provides examples of good practice for pictograms used in toilet to inform users of the function of various control devices. This is for use on both infrastructure and rolling stock.

L.1 Orientation of equipment and associated labels

Having a consistent and logical sequence of equipment enables passengers to understand what they need to do, through familiarity.

The most common and logical sequence is (left to right) Soap, Water, Dryer.

L.2 Function identification

It is important to find a solution that follows a ‘design for all’ principal and is therefore equally understandable by PRM and non PRM passengers in a short period of time. Currently there is a variety of good practice examples from around Europe that can be useful when designing a solution.

L.2.1 Visual identification of the function should be pictograms or simple words.

Pictograms shall have a minimum size of 25 mm x 25 mm (can be included in a push button) and should be as close as possible to the equipment.

The symbol shall contrast with the background of the pictogram; the symbol should be white on a dark background.

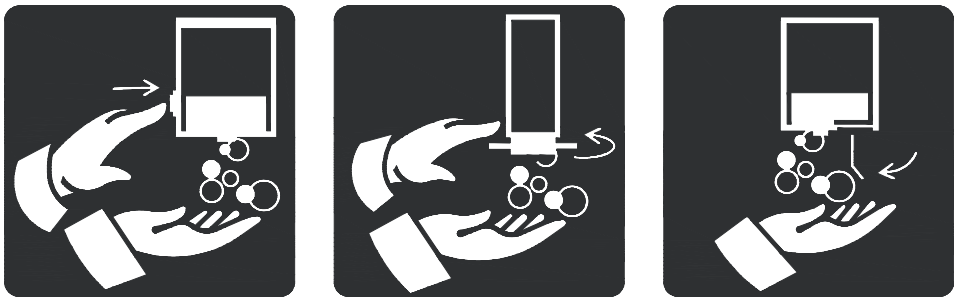

Figure L.1 — Example of 3 variations of pictogram for soap

L.2.2 Tactile identification of the function

i) Tactile identification of the function can be by:

— tactile symbols,

— tactile letters,

— tactile indicators,

— Braille or a combination of these methods.

ii) Tactile symbols for the equipment above the wash basin should:

— be very different and easily identifiable by touch

— be as close as possible to the control device and ideally directly above the functional element e.g. tap

— have as a minimum the symbols for soap, water & hand dryer

iii) Those 3 tactile symbols could be:

— Soap: 3 different bubbles with a minimum interiors diameter of 5 mm

— be as close as possible to the control device and ideally directly above the functional element e.g. tap

— Water: 2 parallels curves

— Hand Dryer: 3 lines with angle 25° between the two lines side by side

Figure L.2 — Example of tactile symbols

iv) Tactile letters for the equipment above the wash basin should:

— be easily identifiable by touch (see Annex B for requirements)

— be as close as possible to the control device and ideally directly above the functional element e.g. tap

— have as a minimum the symbols for soap, water and hand dryer

v) Tactile indicators for the equipment above the wash basin should:

— be very different and easily identifiable by touch

— be as close as possible to the control device and ideally directly above the functional element e.g. tap

— have as a minimum the symbols for soap, water and hand dryer

— Specifications of the tactile points:

  — Ø 2 mm (at base);

  — height 1,5 mm,

- upper part in hemispheric shape,
- the distance between the points is 5 mm

— the tactile indicators can be included in the design of pictogram or separated below the pictogram. If you combine tactile symbols and indicators etc then you need to have them separated by min. 10 mm:

— the indicators should be

- soap: two vertical points
- water: two horizontal points
- hand dryer: three horizontal points
- if the flush command is next to the wash basin devices, the symbol is: one point.

Figure L.3 — Example of the tactile indicators

NOTE 1 Tactile symbol is not necessary for a manual hand dryer (paper or fabric): as identification by touch" is enough.

NOTE 2 Tactile symbol is not necessary for flush command if there is only one system on the wall (for example behind the toilet pan.

NOTE 3 Sensors are not always easy to operate for visually impaired passengers. If sensors are used all the same the control device layout is to be identical except that the pushbuttons above the tactile points should be replaced by tactile-visual arrows ↓ pointing towards the sensors.

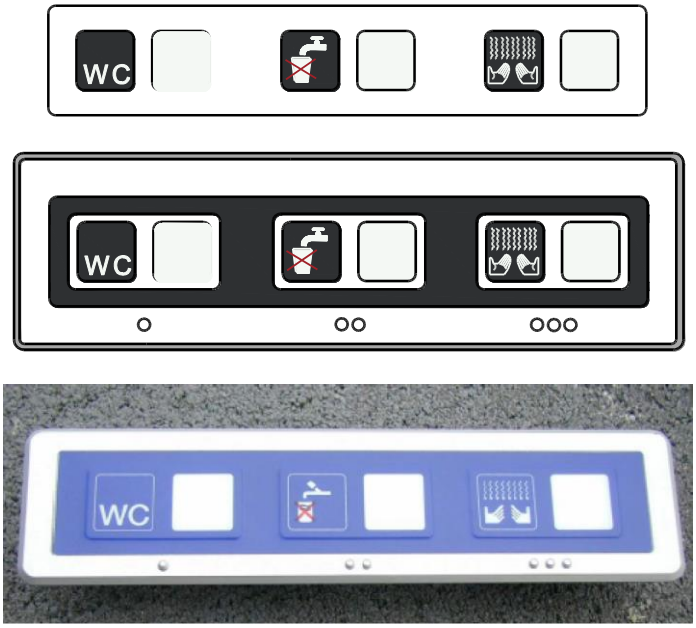

Figure L.4 — Example toilet control panel with pictograms and tactile elements (tactile letters and braille)

Figure L.5 — Example control panel with pictograms and tactile indicators

L.3 “Vacant / occupied / out of service” indicator

L.3.1 General

Outside the toilet the status indications “vacant”, “occupied” and “out of service” have to be recognizable visually and through tactile markings or by acoustic indicators. In the cabin a visual indicator should be sufficient.

L.3.2 Visual recognition:

Colour blind passengers shall also be able to recognize the indicators (a colour change red/green would therefore not be sufficient):

For example:

— vacant: “WC” luminous green, without frame (or non-luminous)

— occupied: “WC” luminous red, with frame

— out of service: “WC” luminous red and crossed out diagonally

NOTE Frame referenced above is an additional line around the symbol or characters on the indicator

L.3.3 Acoustic recognition

On the wall immediately next to the door handle/door knob (at the same level) there is a status pushbutton. It can be easily located/identified by touch (tactile marking “WC”). Above the pushbutton (or on the pushbutton itself) there is a pictogram – maybe as sticker - for visually impaired people. This way able-bodied passengers shall notice that this pushbutton is for visually impaired people only and not relevant to them. To stress the special function of the pushbutton it shall have a blue (or optionally black) edge.

After operating the pushbutton the following acoustic signals shall be emitted:

Table L.1 — Acoustic signals

Toilet status	Sound sequence	Sound duration	Time between sounds
vacant	One short sound	0.3 s	
occupied	3 slightly longer sounds (like busy signal on the telephone)	0.7 s	0.7 s
Out of service	5-6 short staccato sounds	0.15 s	0.15 s

Annex M
(informative)

Electronic display assessment guidance

M.1 General

This Annex provides guidance when assessing electronic display. This is for use on both infrastructure and rolling stock.

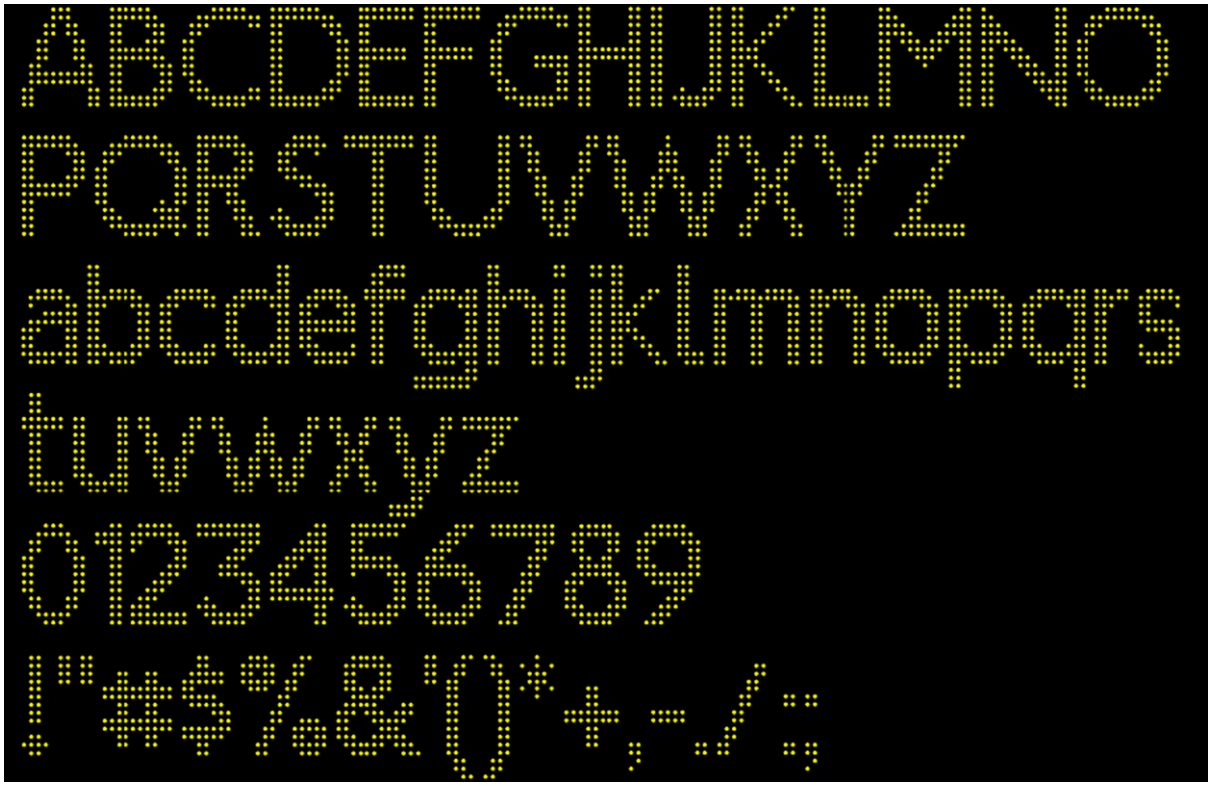

Figure M.1 — Example of Display Font

Table M.1 — Character width in dots

Character	Width (dots)	Character	Width (dots)	Character	Width (dots)	Character	Width (dots)	Character	Width (dots)	Character	Width (dots)
A	11	N	12	a	8	n	8	1	4	&	12
B	11	O	13	b	9	o	9	2	8	(	4
C	9	P	9	c	8	p	9	3	9	)	4
D	11	Q	13	d	9	q	9	4	9	-	5
E	8	R	9	e	8	r	5	5	9	,	2
F	8	S	9	f	6	s	6	6	9	/	8
G	11	T	10	g	9	t	6	7	9	:	2
H	9	U	12	h	8	u	8	8	9		
I	2	V	11	i	2	v	9	9	9		
J	9	W	17	j	4	w	15	0	9		
K	10	X	9	k	8	x	7	<space>	6		
L	8	Y	10	l	4	y	9	'	2		
M	13	Z	10	m	12	z	8	.	2		

M.2 Worked through assessment example

— Average character width

  — Total number of dots for all letter instances separated by one dot = 9 240

  — Total number of characters = 1 079

  — 9 240 dots / 1 079 characters = 8,56 dots/characters

— Average character width scrolling at 6 char/s

  — 6 x 8,56 = 51,38 dots/s

  — Horizontal scrolling rate for ISD = 51 dots/s

  — Compliant with Requirement 1

— Saloon display size = 225 dots

— Maximum number of dots for a complete word to be visible for 2 s at this scrolling speed:

  — 225 - (2 x 51) = 123 dots

— Maximum number of average characters for a complete word to be visible for 2 s at this scrolling speed:

  — 123 / 8,56 = 14.37 characters

— The longest word is 14 characters

  — Compliant with Requirement 2.

Annex N
(informative)

Examples of San Serif Fonts

This Annex provides examples of San Serif fonts that comply with the requirements for use on both infrastructure and rolling stock.

Figure N.1 — Sample of DIN 1451

Figure N.2 — Sample of Frutiger

Figure N.3 — Sample of Futura

Figure N.4 — Sample of Helvetica

Figure N.5 — Sample of DB Sans

Figure N.6 — Sample of Rail Alphabet

Figure N.7 — Sample of GillSans

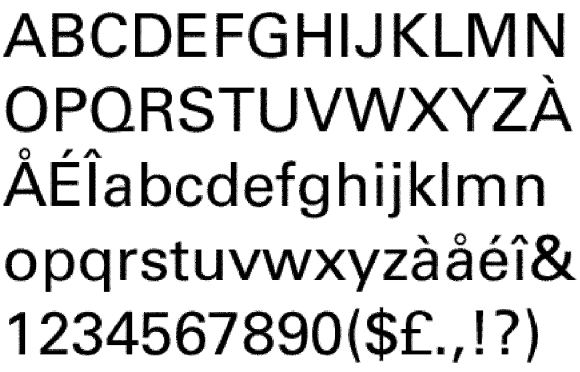

Figure N.8 — Sample of Univers

Annex O
(informative)

Examples of tactile toilet door locking devices

This annex provides good practice examples of tactile toilet door locking devices. This is for use on both infrastructure and rolling stock.

Figure O.1 — Example of door lock device that provides visual and tactile indication of status

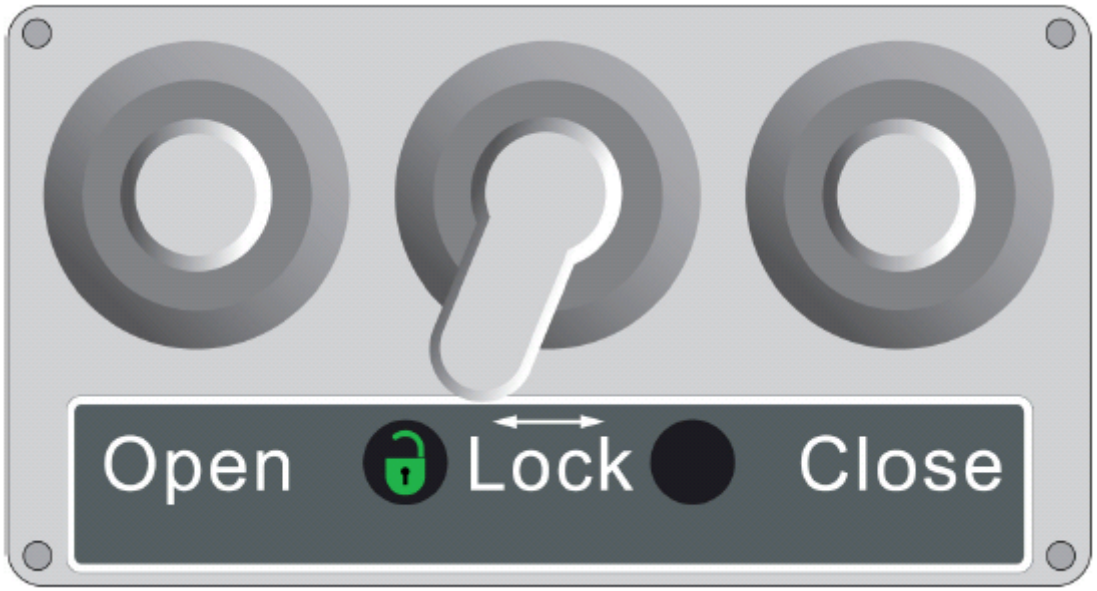

Figure O.2 — Example of door lock that provides visual and tactile indication of status

Figure O.3 — Example of door lock providing visual and tactile indication of status

Figure O.4 — Example of door lock providing visual and tactile indication of status

Annex P
(informative)

Door Buttons

The recommended design and the appropriate pictograms for passenger door operation.

P.1 Examples of door buttons

Dimensions in millimetres

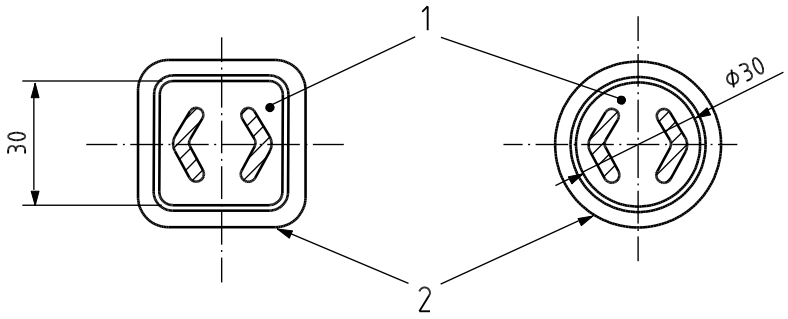

Key
1 pressel
2 halo or bezel

Figure P.1 — Examples of door buttons

The activation area which is sensitive to inputs should have at least a dimension of 30 mm.

As a door button shall be identifiable by touch and operational by palm, the button pressel should protrude at least 3 mm.

The pushbutton should provide at least 0,5 mm pedal travel when pressed. Travel should not be more than the protrusion of the pressel.

P.2 Visual and Tactile symbols on or near door buttons

— to indicate the functionality there should be tactile symbols (arrows) which should protrude by at least 0.5 mm from the surrounding surface and be a minimum height of 15 mm.

— arrow indicating opening/closing: the colour should be different to the surrounding area.

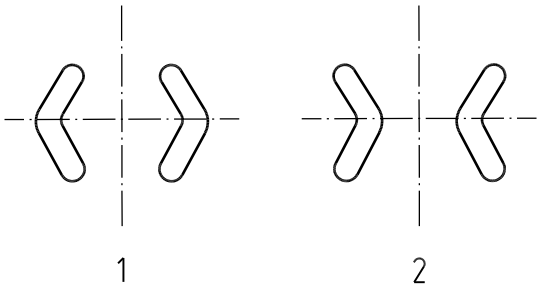

Key
1 open
2 close

Figure P.2 — Arrow indicating opening or closing

— door button with special functions shall be indicated with additional symbols, see Figure P.3

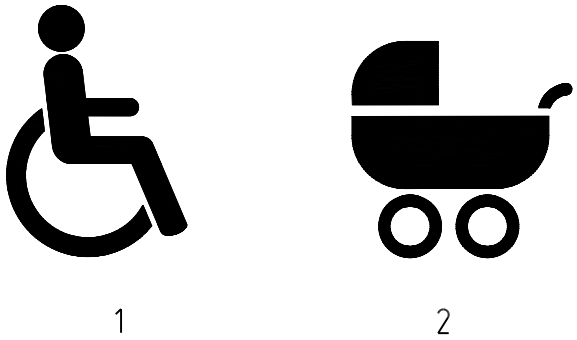

Key
1 wheelchair
2 pram

Figure P.3 — Signs for wheelchair and pram access

Annex ZA
(informative)

Relationship between this European standard and the Essential Requirements of EU Directive 2008/57/EC

This European standard has been prepared under a mandate given to CEN/CENELEC/ETSI by the European Commission and the European Free Trade Association to provide a means of conforming to Essential Requirements of the New Approach Directive 2008/57/EC.

Once this standard is cited in the Official Journal of the European Union under that Directive and has been implemented as a national standard in at least one Member State, compliance with the clauses of this standard given in Table ZA.1, confers, within the limits of the scope of this standard, a presumption of conformity with the relevant Essential Requirements of that Directive and associated EFTA regulations.

Table ZA.1 — Correspondence between this European standard, the PRM TSI[1] and Directive 2008/57/EC

Clause/ subclauses of this European standard	Chapter/§/annexes of the TSI	Corresponding text, articles/§/annexes of the Directive 2008/57/EC[2]	Comments
5.2.2.1 Vertical circulation	4.2.1.2.2 (2)	Annex III Essential Requirements 1 General Requirements 1.1 Safety 1.1.1 1.1.5 1.2 Reliability and availability 1.3 Health 1.3.1 1.6 Accessibility 1.6.1 2 Requirements specific to	
5.2.2.2 Route identification	4.2.1.10		
5.2.2.2 Route identification	4.2.1.2.3		
5.2.4 Ticketing, information desks and customer assistance points	4.2.1.8		
5.2.5 Visual information: signposting, pictograms, printed or dynamic information	4.2.1.10		
5.2.6 Spoken information	4.2.1.11		
5.2.7 Platform danger area and edges of platforms	4.2.1.12		
5.2.8 End of platforms	4.2.1.13		
5.2.10 Level track crossings	4.2.1.15 (3)		
5.2.11 Displays	5.3.1.1		
5.3.1.1 Priority seats	4.2.2.1.2.1		

[1] Technical Specification for interoperability relating to 'Persons with reduced mobility' in the European Union Rail system; Commission Regulation (EU) No 1300/2014

[2] including additional Essential Requirements following Commission Directive 2013/9/EU

5.3.2 (1) Wheelchair spaces	5.3.2.6	each subsystem 2.1 Infrastructure 2.1.1 Safety 2.1.2 Accessibility 2.4 Rolling stock 2.4.1 Safety 2.4.2 Reliability and availability 2.4.3. Technical compatibility 2.4.5 Accessibility 2.4.5.1	
5.3.2 (2) Wheelchair spaces	4.2.2.2 (15)		
5.3.3.1 Interface of the door control device	5.3.2.1		
5.3.3.2 Exterior doors	4.2.2.3.2		
5.3.4.1 (1) Toilets	5.3.2.2 (2)		
5.3.4.1 (2) Toilets	5.3.2.2 (4)		
5.3.4.1 (3) Toilets	5.3.2.2 (5)		
5.3.4.1 (4) Toilets	4.2.2.7.2 (8)		
5.3.4.2 (1) Universal toilet	5.3.2.4 (4)		
5.3.4.2 (2) Universal toilet	4.2.2.7.2 (5)		
5.3.4.2 (3) Universal toilet	5.3.2.4 (11)		
5.3.4.2 (4) Universal toilet	5.3.2.4 (16)		
5.3.5.1 (2) Customer information General	4.2.2.7.1 (3)		
5.3.5.1 (3) Customer information General	4.2.2.7.1 (4)		
5.3.5.2 Signage, pictograms and tactile information	4.2.2.7.2		
5.3.5.3 Dynamic visual information	4.2.2.7.3		
5.3.5.3 Dynamic audible information	4.2.2.7.4		
5.3.6 Internal and external displays	5.3.2.7		
5.3.7 Call for aid device	5.3.2.6		
5.3.8 (1) Wheelchair accessible sleeping accommodation	4.2.2.10 (3)		
5.3.8 (2) Wheelchair accessible sleeping accommodation	4.2.2.10 (5)		

WARNING — Other requirements and other EC Directives may be applicable to the product(s) falling within the scope of this standard

.

Bibliography

[1] Commission Regulation (EU) No 1300/2014, *Technical Specification of Interoperability for Persons of Reduced Mobility*

[2] ISO/TR 7239:1984, *Development and principles for application of public information symbols*

[3] ISO 9186-1:2007, *Graphical symbols — Test methods — Part 1: Methods for testing comprehensibility*

[4] EN 14752 Railway applications — Bodyside Entrance Systems for rolling stock

[5] EN 16584-1, Railway applications — Design for PRM Use — General Requirements — Part 1: Contrast.

[6] EN 16584-3, Railway applications — Design for PRM Use — General Requirements — Part 3: Optical and friction characteristics.

[7] EN 16585-1, Railway applications — Design for PRM Use — Equipment and Components on board Rolling Stock — Part 1: Toilets.

[8] EN 16585-2, Railway applications — Design for PRM Use — Equipment and Components on board Rolling Stock — Part 2: Elements for sitting, standing and moving.

[9] EN 16585-3, Railway applications — Design for PRM Use — Equipment and Components on board Rolling Stock — Part 3: Passageways and Internal doors.

[10] EN 16586-1, Railway applications — Design for PRM Use — Accessibility of Persons with Reduced Mobility to rolling stock — Part 1: Steps for Egress and Access

[11] EN 16586-2, Railway applications — Design for PRM Use — Accessibility of Persons with Reduced Mobility to rolling stock — Part 2: Boarding Aids

[12] EN 16587, Railway applications — Design for PRM Use — Requirements for obstacle free routes (infrastructure only).

[13] BS 8300:2009+A1:2010, Design of buildings and their approaches to meet the needs of disabled people. Code of practice.

[14] DIN 32976:2007-08, Blindenschrift - Anforderungen und Maße

[15] ETSI EN 301 462 (2000-03), Human Factors (HF); Symbols to identify telecommunications facilities for deaf and hard of hearing people